US Army Corps of Engineers ®
Walla Walla District

McNARY LOCK AND DAM
JUVENILE FISH FACILITY
OUTFALL PIPE RELOCATION FY2010

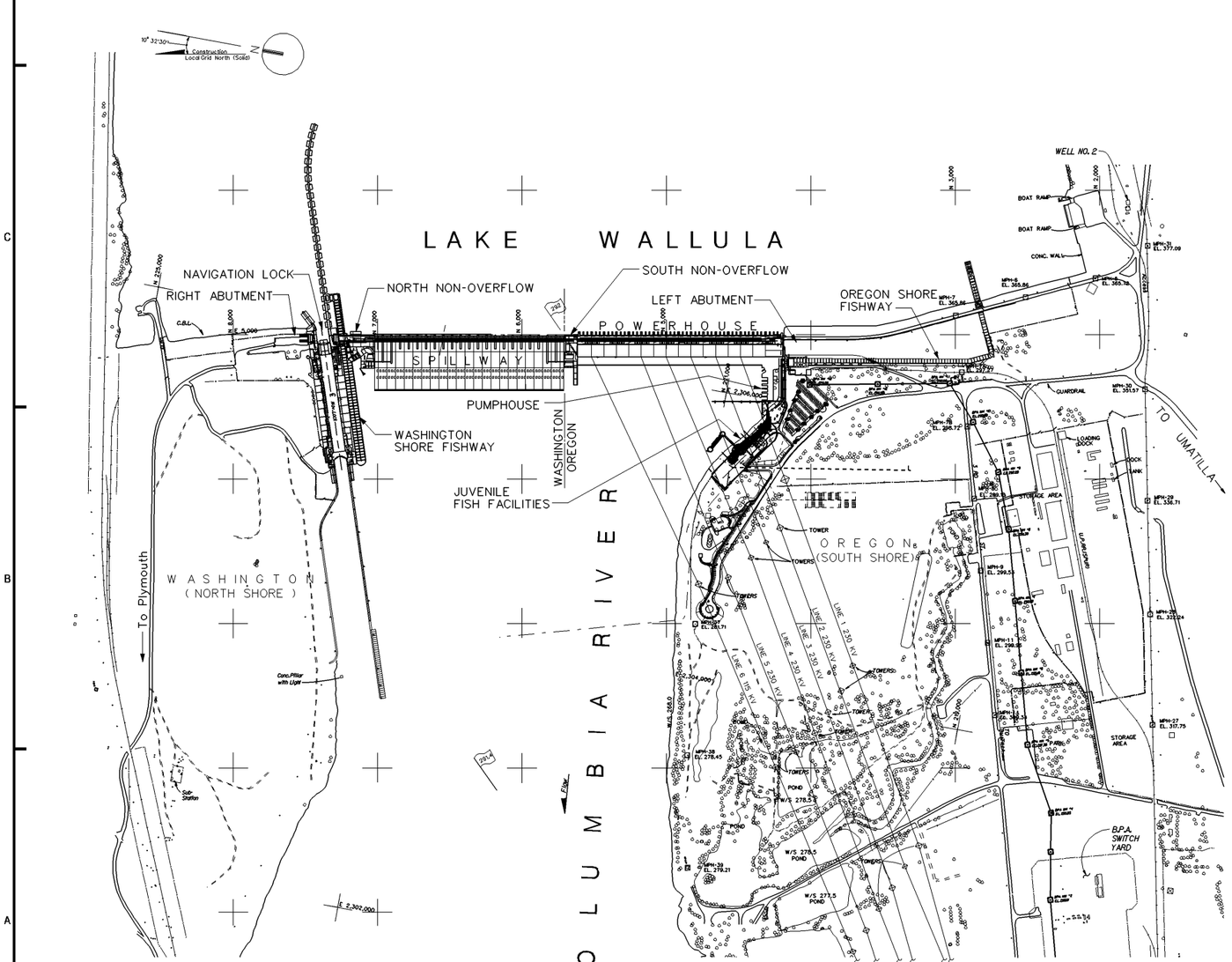

SITE PLAN
NOT TO SCALE

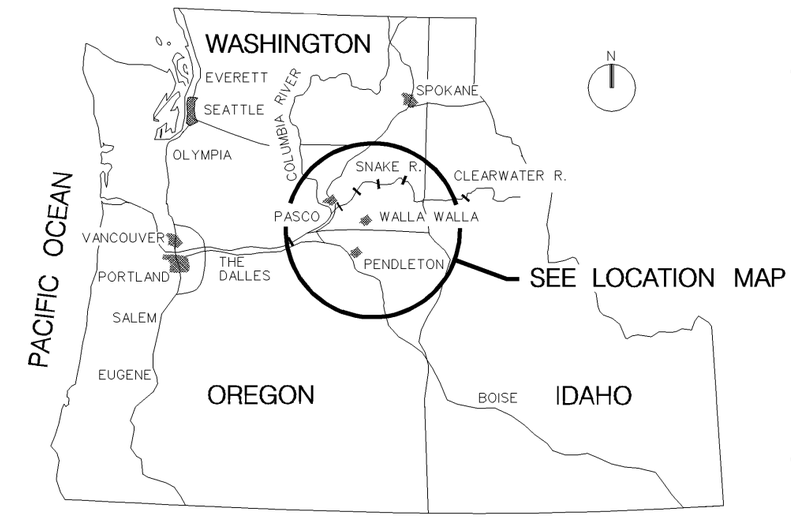

VICINITY MAP
NOT TO SCALE

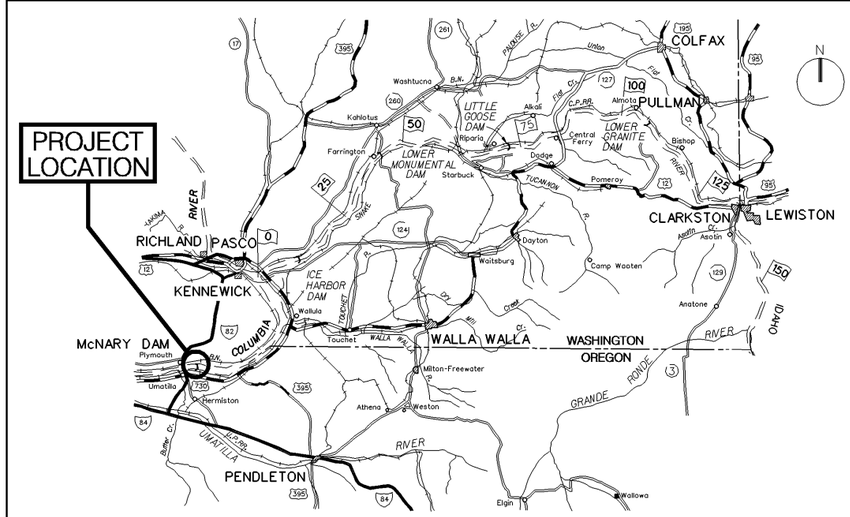

LOCATION MAP
NOT TO SCALE

Symbol	Description	Date	Appr.

SET
60% REVIEW
12/20/10

This project was designed by the Walla Walla Corps of Engineers, U.S. Army. The initiation of signatures and registration designations of individuals preparing work in the project documents within the scope of their authority is required by ER 1110-1-8152.

Recommended by: Chief, Design Branch Date:
Approved by: Bill Miller, P.E. Chief, Eng. & Const. Div. Date:

DESIGNED BY: DESIGNER'S NAME
DWN BY: DWN BY:
CHKD BY: CHK BY:
SUBMITTED BY: SUBMITTER'S NAME
CHIEF DES. SEC.
DATE: DY MON YR
SOLICITATION NO. XX-B-XXXX
CONTRACT NO.
FILE NO. FILE NUMBER

U.S. ARMY ENGINEER DISTRICT
CORPS OF ENGINEERS
WALLA WALLA, WASHINGTON

McNARY LOCK AND DAM
COLUMBIA RIVER, OREGON AND WASHINGTON
JUVENILE FISH FACILITY – FY2010
OUTFALL PIPE RELOCATION – FY2010
COVER SHEET AND LOCATION MAPS

Sheet number:
G–001

L:\MNA\CAD\MFF2\MFF2G-001G01.DGN

BORDER SIZE IS ANSI D $TIME DATE AND TIME PLOTTED:20-DEC-2010 10:43 DESIGN FILE:L:\MNA\CAD\MFF2\MFF2G-001G01.DGN SCALE$SCALE$ USERNAME$USER$

INDEX TO DRAWINGS

SHEET NO.	FILE NUMBER	CADD FILE NAME	TITLE
GENERAL			
G-001	FN	MFF2G-001G01.DGN	COVER SHEET AND LOCATION MAPS
G-002	FN	MFF2G-002G02.DGN	INDEX TO DRAWINGS
CIVIL			
C-101	FN	MFF2C-101---.DGN	GENERAL PLAN VIEW
C-102	FN	MFF2C-102---.DGN	PIPE PROFILE
C-301	FN	MFF2C-301---.DGN	36" PIPE CROSS SECTIONS
C-302	FN	MFF2C-302---.DGN	PIPE CROSS SECTIONS
STRUCTURAL			
S-101		MFF2S-101---.DGN	GENERAL PLAN
S-102		MFF2S-102---.DGN	PARTIAL SITE PLAN
S-103		MFF2S-103---.DGN	PARTIAL SITE PLAN
S-200	FN	MFF2S-200C--.DGN	SOUTH ELEVATION LAB BUILDING
S-201	FN	MFF2S-201C--.DGN	SOUTH ELEVATION LAB BUILDING
S-202	FN	MFF2S-202C--.DGN	SOUTH ELEVATION LAB BUILDING
S-211	FN	MFF2S-211B--.DGN	ABOVE WATER PROFILE
S-212	FN	MFF2S-212B--.DGN	ABOVE WATER PROFILE
S-213	FN	MFF2S-213B--.DGN	ABOVE WATER PROFILE
S-301	FN	MFF2S-301---.DGN	ABOVE WATER SECTION CUT
S-302	FN	MFF2S-302---.DGN	JFF STEEL PIPE SUPPORT
S-502	FN	MFF2S-502---.DGN	SECTIONS AND DETAILS
S-503	FN	MFF2S-503---.DGN	SECTIONS AND DETAILS
S-504	FN	MFF2S-504---.DGN	SECTIONS AND DETAILS
MECHANICAL			
MD-101	FN	MFF2MD101---.DGN	FISH FACILITY - DEMOLITION PLAN
MD-102	FN	MFF2MD102---.DGN	RIVER RELEASE PIPE - DEMOLITION PLAN
M-101	FN	MFF2M-101---.DGN	GENERAL PIPING PLAN
M-102	FN	MFF2M-102---.DGN	OUTFALL PIPE - OVER WATER PLAN
M-103	FN	MFF2M-103---.DGN	OUTFALL PIPE - OVER LAND PLAN
M-104	FN	MFF2M-104---.DGN	FISH FACILITY - PIPING ARRANGEMENT
M-105	FN	MFF2M-105---.DGN	FISH FACILITY - PIPELINE CONTROL POINTS
M-106	FN	MFF2M-106---.DGN	PIT TAG PIPING - PLAN
M-107	FN	MFF2M-107---.DGN	LAMPREY PIPING - PLAN
M-108	FN	MFF2M-108---.DGN	MISCELLANEOUS PIPE AND FLUME SEGMENTS - PLAN
M-201	FN	MFF2M-201---.DGN	NORTH SIDE OF JFF - ELEVATION
M-202	FN	MFF2M-202---.DGN	LAMPREY PIPING - ELEVATION
M-401	FN	MFF2M-401---.DGN	PIPE "Y" JUNCTION - DETAILS 1
M-402	FN	MFF2M-402---.DGN	PIPE "Y" JUNCTION - DETAILS 2
M-403	FN	MFF2M-403---.DGN	PIPE CONNECTION DETAILS
M-404	FN	MFF2M-404---.DGN	PIPE EXPANSION JOINT DETAILS
M-410	FN	MFF2M-410---.DGN	RACEWAY LAMPREY COLLECTION CHANNEL - PLAN AND ELEVATION
M-411	FN	MFF2M-411---.DGN	RACEWAY LAMPREY COLLECTION CHANNEL - DETAILS
M-420	FN	MFF2M-420---.DGN	SWITCH GATE - PLAN AND ELEVATION
M-421	FN	MFF2M-421---.DGN	SWITCH GATE - DETAILS 1
M-422	FN	MFF2M-422---.DGN	SWITCH GATE - DETAILS 2

FOR INFORMATION ONLY

SHEET NO.	FILE NUMBER	CADD FILE NAME	TITLE
I-001	FN	XXXXFIO_01.DGN	X
I-002	FN	XXXXFIO_02.DGN	X
I-003	FN	XXXXFIO_03.DGN	X
I-004	FN	XXXXFIO_04.DGN	X
I-005	FN	XXXXFIO_05.DGN	X
I-006	FN	XXXXFIO_06.DGN	X
I-007	FN	XXXXFIO_07.DGN	X
I-008	FN	XXXXFIO_08.DGN	X
I-009	FN	XXXXFIO_09.DGN	X
I-010	FN	XXXXFIO_10.DGN	X
I-011	FN	XXXXFIO_11.DGN	X
I-012	FN	XXXXFIO_12.DGN	X
I-013	FN	XXXXFIO_13.DGN	X
I-014	FN	XXXXFIO_14.DGN	X

US Army Corps of Engineers
Walla Walla District

60% REVIEW SET
12/20/10

Symbol	Description	Date	Appr.	Symbol	Description	Date	Appr.

U.S. ARMY ENGINEER DISTRICT
CORPS OF ENGINEERS
WALLA WALLA, WASHINGTON

DESIGNED BY: DESIGNER'S NAME
DWN BY: DWN BY
CHKD BY: CHK BY
SUBMITTED BY: SUBMITTER'S NAME
CHIEF DES. SEC.
DATE: DY MON YR
SOLICITATION NO. XX-B-XXXX
CONTRACT NO.
FILE NO.: FILE NUMBER

MONARY LOCK AND DAM
COLUMBIA RIVER, OREGON AND WASHINGTON
JUVENILE FISH FACILITY - OUTFALL PIPE RELOCATION - FY2010
INDEX TO DRAWINGS

Sheet number:
G-002

L:\MNA\CAD\MFF2\MFF2G-002G02.DGN

BORDER SIZE IS ANSI D

$TIME DATE AND TIME PLOTTED:20-DEC-2010 10:17 DESIGN FILE:L:\MNA\CAD\MFF2\MFF2G-002G02.DGN SCALE$SCALE$ USERNAME$USER$

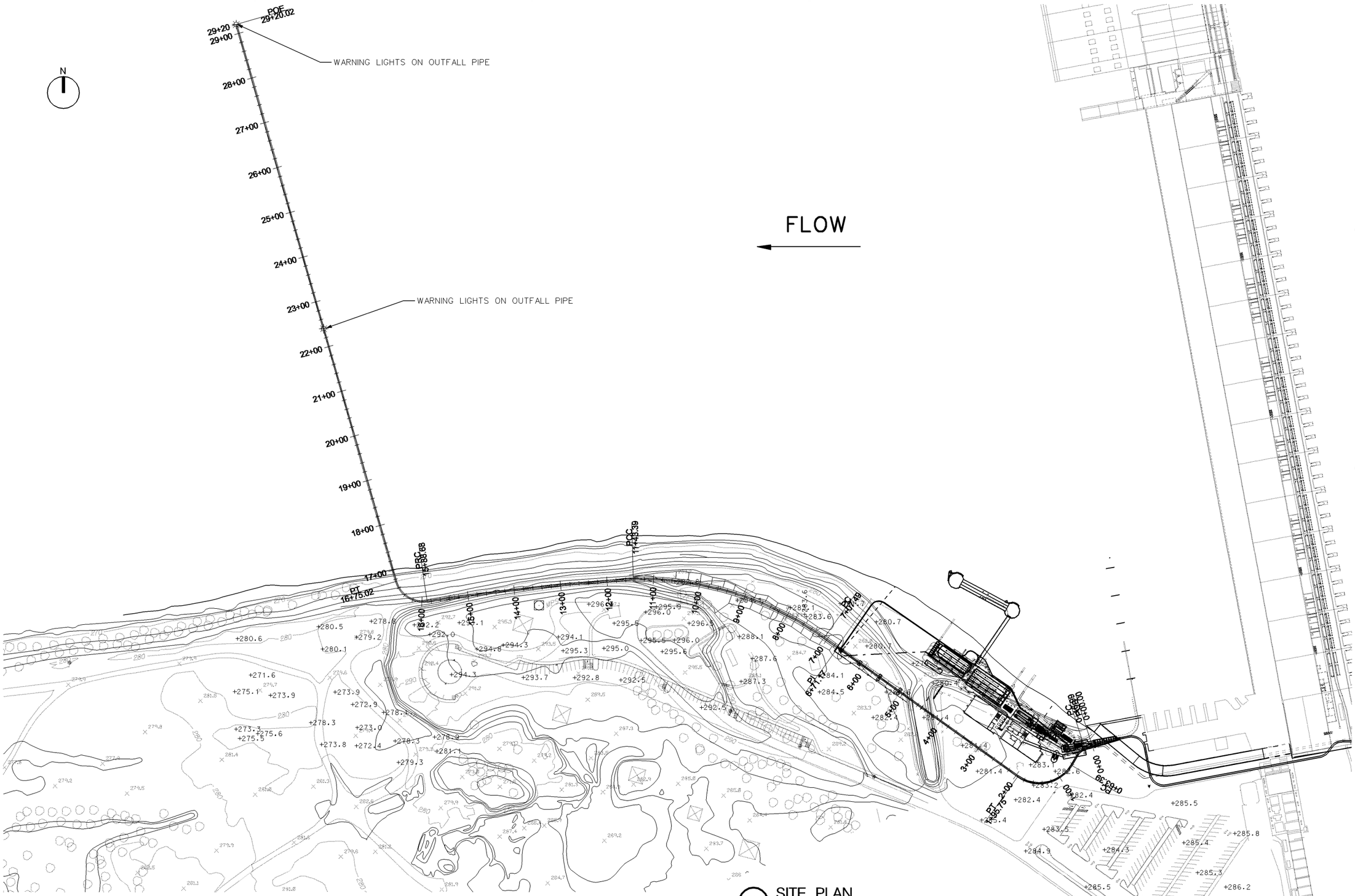

A SITE PLAN

0' 100' 200'

US Army Corps of Engineers
Walla Walla District

60% REVIEW SET
12/20/10

Symbol	Description	Date	Appr.	Symbol	Description	Date	Appr.

DESIGNED BY: DESIGNER'S NAME
DWN BY: DWN BY
CHKD BY: CHKD BY
SUBMITTED BY: SUBMITTER'S NAME
DATE: MON YR
SOLICITATION NO. DACW-XXXX
CONTRACT NO. NAME DES. SEC.
FILE NO.: FILE NUMBER

U.S. ARMY ENGINEER DISTRICT
CORPS OF ENGINEERS
WALLA WALLA, WASHINGTON

MCNARY LOCK AND DAM
COLUMBIA RIVER, OREGON AND WASHINGTON
JUVENILE FISH FACILITY –
OUTFALL PIPE RELOCATION – FY2010
MCNARY OUTFALL PIPE
SITE PLAN

Sheet number:
C–101

L:\MNA\CAD\MFF2\MFF2C-101---.DGN

BORDER SIZE IS ANSI D

$TIME DATE AND TIME PLOTTED:20-DEC-2010 09:39 DESIGN FILE:L:\MNA\CAD\MFF2\MFF2C-101---.DGN

SCALE$SCALE$ USERNAME$USER$

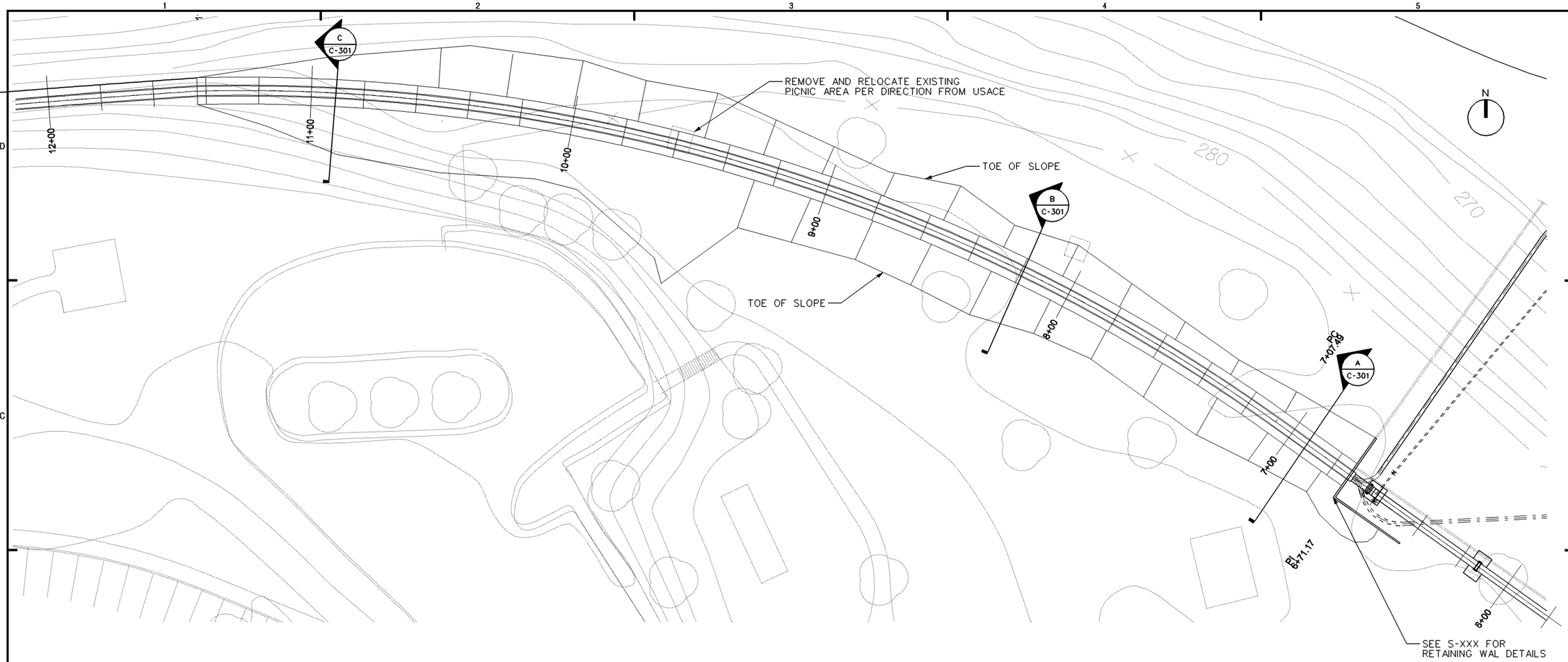

A STA 6+71.17 TO 12+00

0' 20' 40'

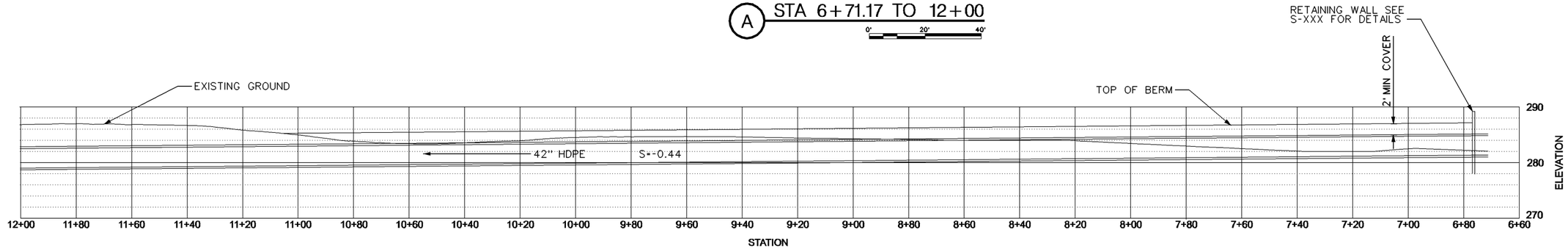

B PROFILE FROM STA 6+71.17 TO 12+00

HORIZONTAL 0' 20' 40'

VERTICAL 0' 40' 80'

US Army Corps of Engineers
Walla Walla District

60% REVIEW SET
12/20/10

Symbol	Description	Date	Appr.	Symbol	Description	Date	Appr.

U.S. ARMY ENGINEER DISTRICT
CORPS OF ENGINEERS
WALLA WALLA, WASHINGTON

DESIGNED BY: DESIGNER'S NAME
DWN BY: DWN BY
CHKED BY: CHK BY
SUBMITTED BY: SUBMITTER'S NAME
CHIEF DES. SEC.
DATE: DY MON YR
SOLICITATION NO. XX-B-XXXX
CONTRACT NO.
FILE NO. FILE NUMBER

MCNARY LOCK AND DAM
COLUMBIA RIVER, OREGON AND WASHINGTON
JUVENILE FISH FACILITY - FY2010
OUTFALL PIPE RELOCATION
MCNARY OUTFALL
PLAN AND PROFILE
STA 6+71.17 TO 12+00

Sheet number:
C-102

L:\MNA\CAD\MFF2\MFF2C-102---.DGN

BORDER SIZE IS ANSI D

$TIME DATE AND TIME PLOTTED:20-DEC-2010 09:39 DESIGN FILE:L:\MNA\CAD\MFF2\MFF2C-102---.DGN SCALE$SCALE$ USERNAME$USER$

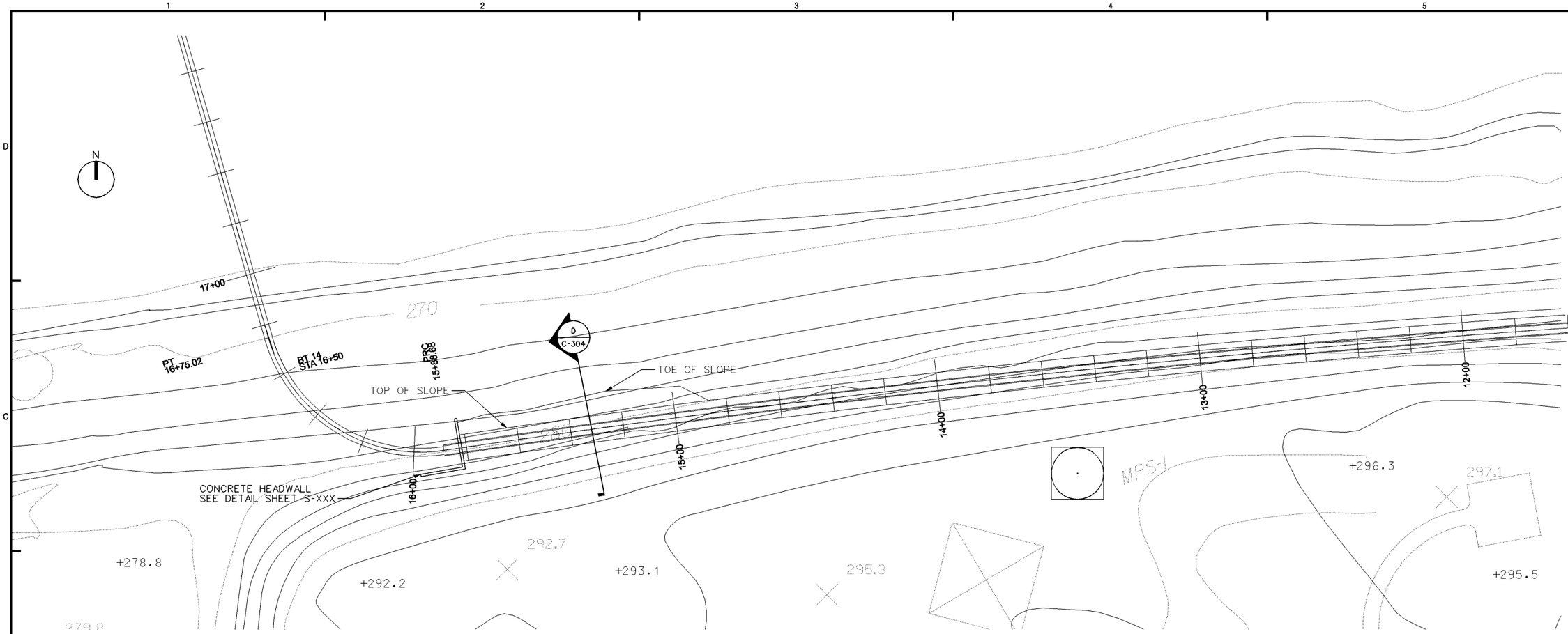

A STA 12+00 TO 17+00

0' 20' 40'

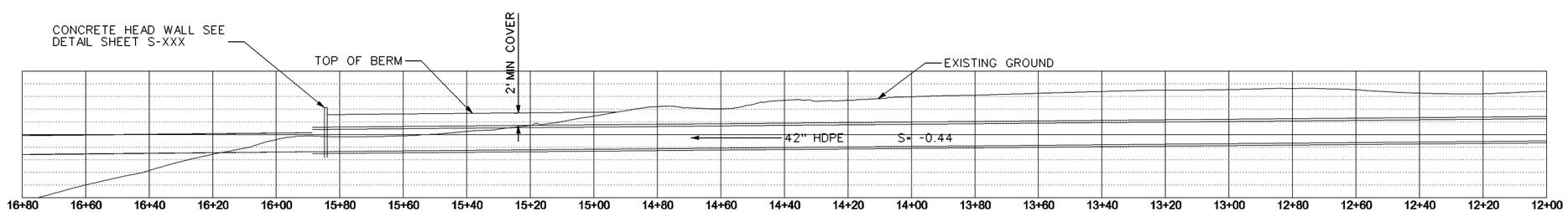

B PROFILE STA 12+00 TO 17+00

HORIZONTAL 0' 20' 40'

VERTICAL 0' 40' 80'

US Army Corps of Engineers
Walla Walla District

Symbol	Description	Date	App.	Symbol	Description	Date	App.

60% REVIEW SET
12/20/10

DESIGNED BY: DESIGNER'S NAME
DWN BY: DWN BY
CHKED BY: CHK BY
SUBMITTED BY: SUBMITTER'S NAME
CHIEF DES. SEC.
DATE: DY MON YR
SOLICITATION NO. XX-B-XXXX
CONTRACT NO.
FILE NO.: FILE NUMBER

U.S. ARMY ENGINEER DISTRICT
CORPS OF ENGINEERS
WALLA WALLA, WASHINGTON

MCNARY LOCK AND DAM
COLUMBIA RIVER, OREGON AND WASHINGTON
JUVENILE FISH FACILITY – FY2010
OUTFALL PIPE RELOCATION
MCNARY OUTFALL
PLAN AND PROFILE
STA 12+00 TO 17+00

Sheet number:
C–103

L:\MNA\CAD\MFF2\MFF2C-103---.DGN

BORDER SIZE IS ANSI D

$TIME DATE AND TIME PLOTTED:20-DEC-2010 09:39 DESIGN FILE:L:\MNA\CAD\MFF2\MFF2C-103---.DGN SCALE$SCALE$ USERNAME$USER$

A IRRIGATION PLAN

0' 60' 120'

US Army Corps of Engineers
Walla Walla District

60% REVIEW SET
12/20/10

Symbol	Description	Date	Appr.	Symbol	Description	Date	Appr.

U.S. ARMY ENGINEER DISTRICT
CORPS OF ENGINEERS
WALLA WALLA, WASHINGTON

DESIGNED BY: DESIGNER'S NAME
DWN BY: DWN BY:
CHKED BY: CHK BY:
SUBMITTED BY: SUBMITTER'S NAME
CHIEF: DES. SEC.
DATE: DY MON YR
SOLICITATION NO. XX-B-XXXX
CONTRACT NO.
FILE NO.: FILE NUMBER

MONARY LOCK AND DAM
COLUMBIA RIVER, OREGON AND WASHINGTON
JUVENILE FISH FACILITY – OUTFALL PIPE RELOCATION – FY2010
EXISTING IRRIGATION PLAN

Sheet number:
C–104

L:\MNA\CAD\MFF2\MFF2C-104---.DGN

BORDER SIZE IS ANSI D

$TIME DATE AND TIME PLOTTED:20-DEC-2010 09:39 DESIGN FILE:L:\MNA\CAD\MFF2\MFF2C-104---.DGN SCALE$SCALE$ USERNAME$USER$

A DRAINFIELD LOCATION

0' 20' 40'

US Army Corps of Engineers
Walla Walla District

60% REVIEW SET
12/20/10

Symbol	Description	Date	Appr.	Symbol	Description	Date	Appr.

U.S. ARMY ENGINEER DISTRICT
CORPS OF ENGINEERS
WALLA WALLA, WASHINGTON

DESIGNED BY: DESIGNER'S NAME
DWN BY: DWN BY
CHKD BY: CHK BY
DATE: DY MON YR
SOLICITATION NO. XX-B-XXXX
SUBMITTED BY: SUBMITTER'S NAME, CHIEF
DES. SEC.
CONTRACT NO.
FILE NO.: FILE NUMBER

MCNARY LOCK AND DAM
COLUMBIA RIVER, OREGON AND WASHINGTON
JUVENILE FISH FACILITY – OUTFALL PIPE RELOCATION – FY2010
MCNARY LOCATION PLAN

Sheet number:
C–105

L:\MNA\CAD\MFF2\MFF2C-105---.DGN

BORDER SIZE IS ANSI D

$TIME DATE AND TIME PLOTTED:20-DEC-2010 09:39 DESIGN FILE:L:\MNA\CAD\MFF2\MFF2C-105---.DGN SCALE$SCALE$ USERNAME$USER$

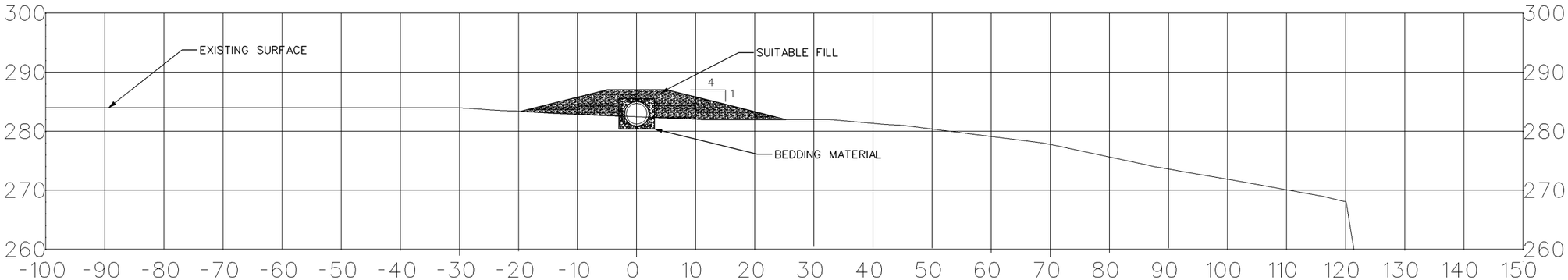

A TYPICAL SECTION AT STA 7+00

0' 10' 20'

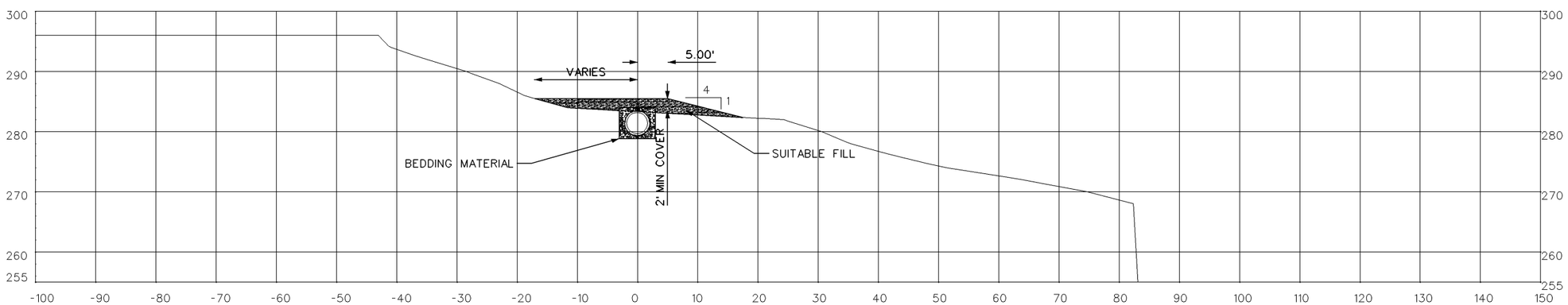

A TYPICAL SECTION AT STA 8+20 TO 10+00

0' 10' 20'

US Army Corps of Engineers
Walla Walla District

Symbol	Description	Date	Appr.	Symbol	Description	Date	Appr.

60% REVIEW SET

12/20/10

U.S. ARMY ENGINEER DISTRICT
CORPS OF ENGINEERS
WALLA WALLA, WASHINGTON

DESIGNED BY: DESIGNER'S NAME
DWN BY: DWN BY
CHKD BY: CHK BY
SUBMITTED BY: SUBMITTER'S NAME
CHIEF DES. SEC.
DATE: DY MON YR
SOLICITATION NO. XX-B-XXXX
CONTRACT NO.
FILE NUMBER

MCNARY LOCK AND DAM
COLUMBIA RIVER OREGON AND WASHINGTON
JUVENILE FISH FACILITY – OUTFALL PIPE RELOCATION – FY2010
MCNARY OUTFALL
TYPICAL CROSS SECTIONS

Sheet number:
C-301

L:\MNA\CAD\MFF2\MFF2C-301---.DGN

BORDER SIZE IS ANSI D

$TIME DATE AND TIME PLOTTED:20-DEC-2010 09:38 DESIGN FILE:L:\MNA\CAD\MFF2\MFF2C-301---.DGN SCALE$SCALE$ USERNAME$USER$

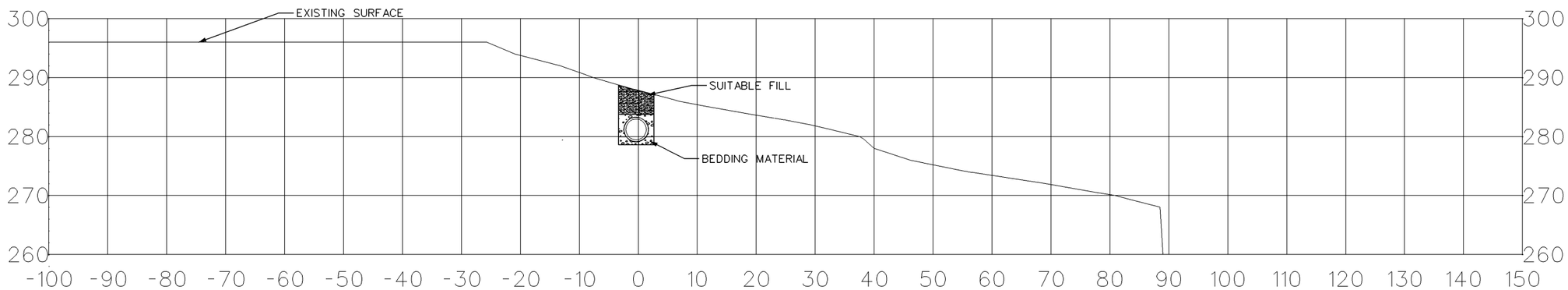

C TYPICAL SECTION AT STA 11+00

0' 10' 20'

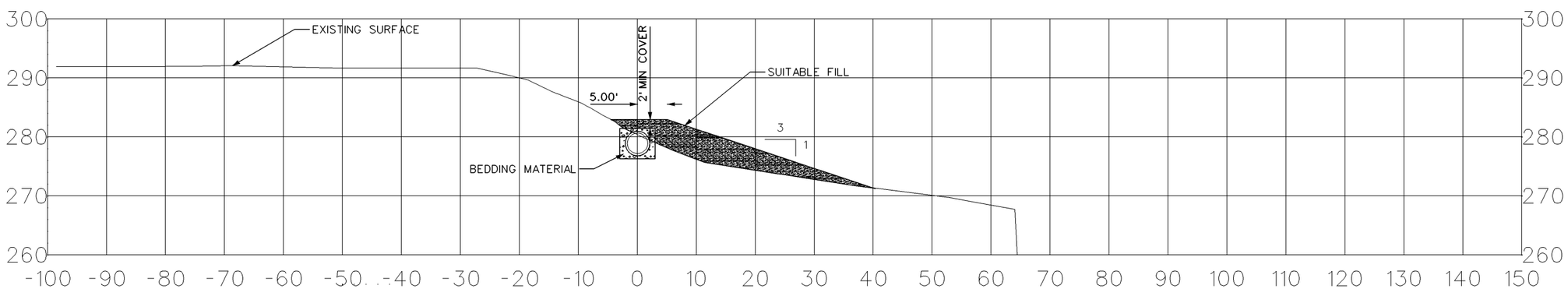

D TYPICAL SECTION AT SAT 15+50

0' 10' 20'

US Army Corps of Engineers
Walla Walla District

60% REVIEW SET
12/20/10

Symbol	Description	Date	Appr.	Symbol	Description	Date	Appr.

DESIGNED BY: DESIGNER'S NAME
DWN BY: DWN BY
CHKED BY: CHK BY
SUBMITTED BY: SUBMITTER'S NAME
CHIEF DES. SEC.
DATE: DY MON YR
SOLICITATION NO. XX-B-XXXX
CONTRACT NO.
FILE NUMBER

U.S. ARMY ENGINEER DISTRICT
CORPS OF ENGINEERS
WALLA WALLA, WASHINGTON

MCNARY LOCK AND DAM
COLUMBIA RIVER OREGON AND WASHINGTON
JUVENILE FISH FACILITY – OUTFALL PIPE RELOCATION – FY2010
MCNARY OUTFALL
TYPICAL CROSS SECTIONS

Sheet number:
C–302

L:\MNA\CAD\MFF2\MFF2C-302---.DGN

BORDER SIZE IS ANSI D

$TIME DATE AND TIME PLOTTED:20-DEC-2010 09:38 DESIGN FILE:L:\MNA\CAD\MFF2\MFF2C-302---.DGN SCALE$SCALE$ USERNAME$USER$

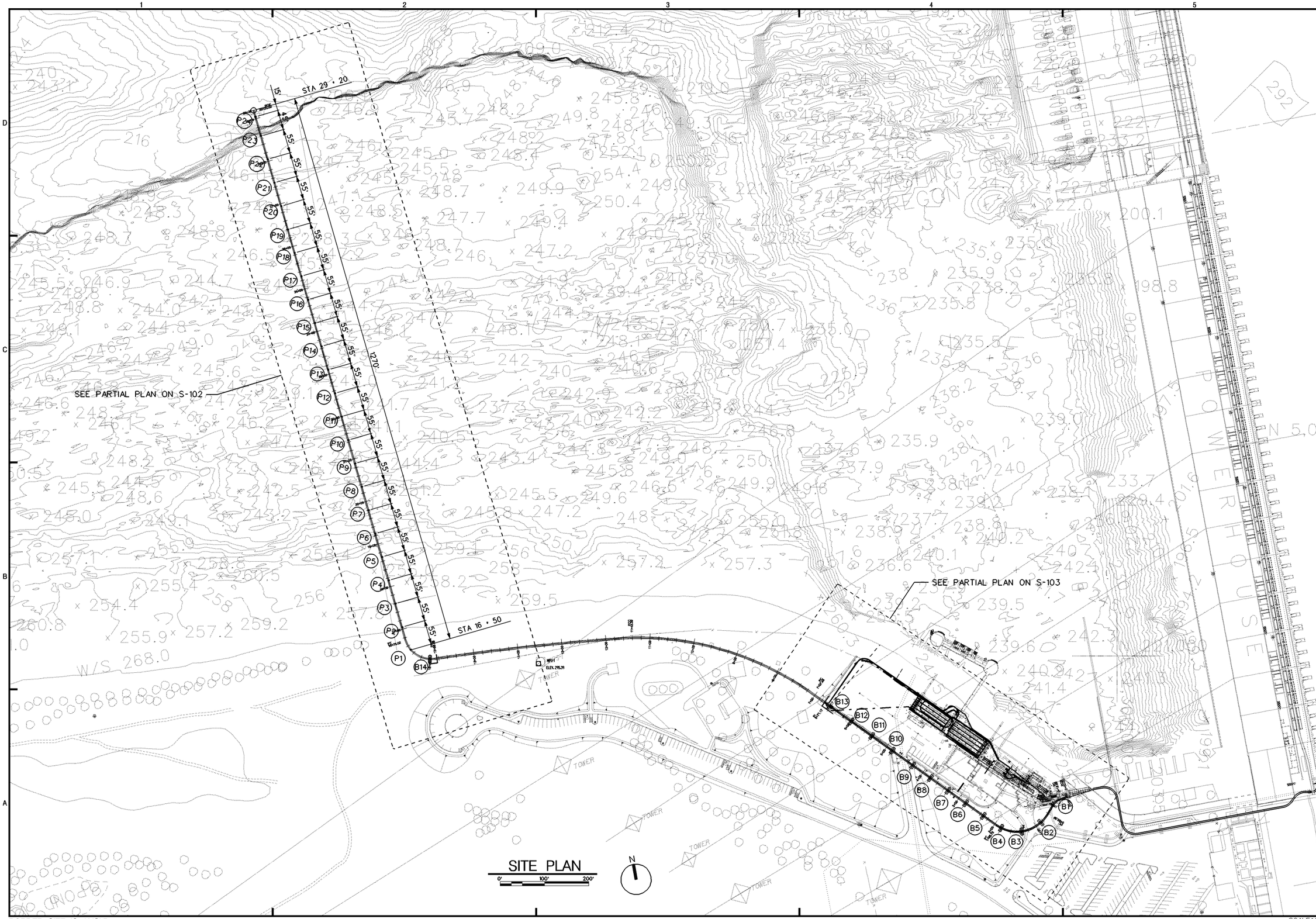

SITE PLAN

0' 100' 200'

US Army Corps of Engineers
Walla Walla District

Symbol	Description	Date	Appr.	Symbol	Description	Date	Appr.

60% REVIEW SET

12/20/10

DESIGNED BY: ROSHANI
DATE: DY MON YR
DWN BY:
CHKED BY:
CHK BY
SOLICITATION NO. XX-B-XXXX
SUBMITTED BY: R. HOLLENBECK
CONTRACT NO.
FILE NO. FILE NUMBER

U.S. ARMY ENGINEER DISTRICT
CORPS OF ENGINEERS
WALLA WALLA, WASHINGTON

MCNARY LOCK AND DAM
COLUMBIA RIVER, OREGON AND WASHINGTON
JUVENILE FISH FACILITY – FY2010
OUTFALL PIPE RELOCATION

GENERAL PLAN

Sheet number:
S–101

L:\MNA\CAD\MFF2\MFF2S-101---.DGN

BORDER SIZE IS ANSI D

$TIME DATE AND TIME PLOTTED:20-DEC-2010 09:36 DESIGN FILE:L:\MNA\CAD\MFF2\MFF2S-101---.DGN SCALE$SCALE$ USERNAME$USER$

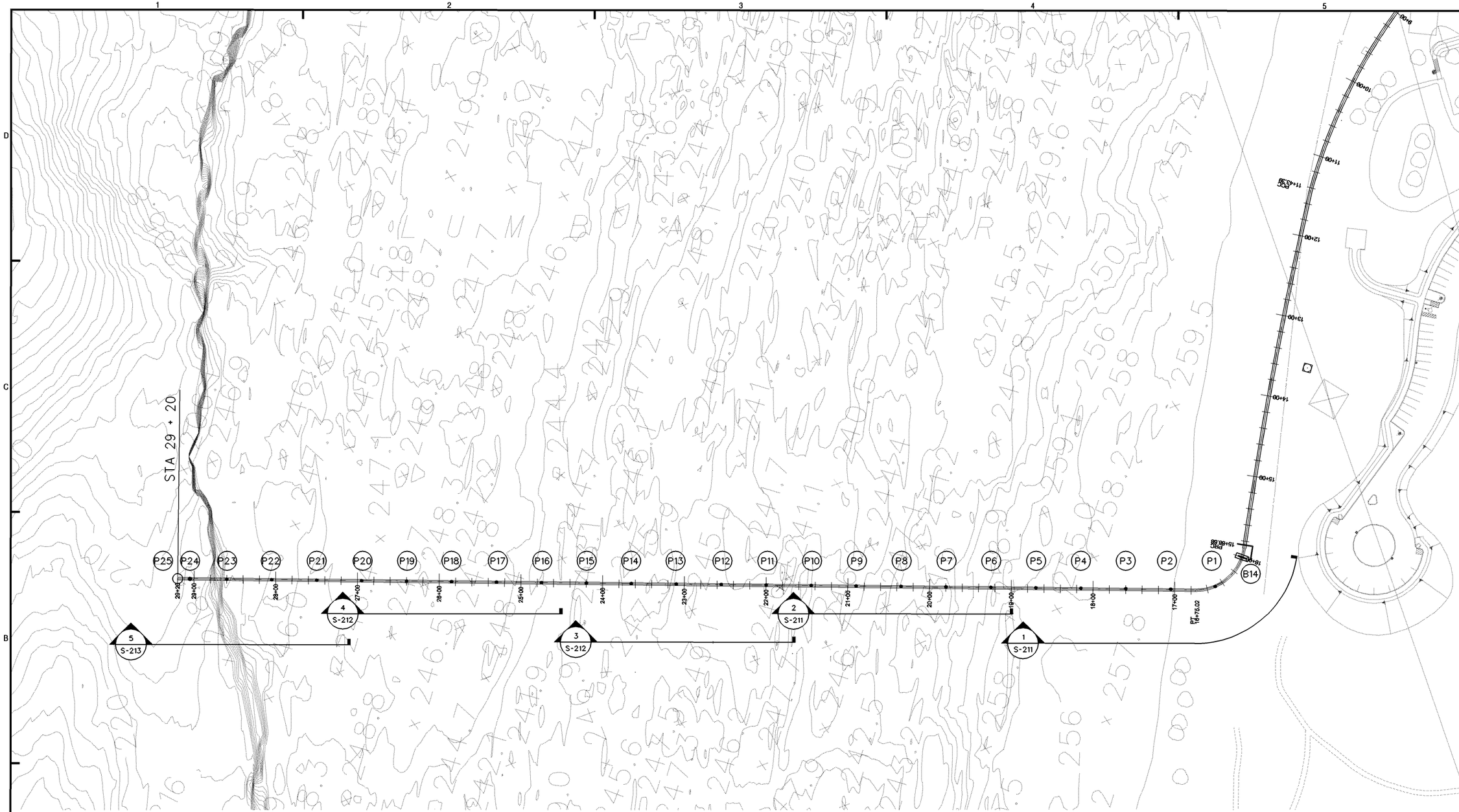

PARTIAL SITE PLAN

0' 50' 100'

N

US Army Corps of Engineers
Walla Walla District

Symbol	Description	Date	App. Symbol	Description	Date	App.

60% REVIEW SET

12/20/10

DESIGNED BY: ROSHANI
DWN BY:
CHKED BY:
CHK BY:
SUBMITTED BY: R. HOLLENBECK
CHIEF STRUCT. DES. SEC.
DATE: DY MON YR
SOLICITATION NO. XX-B-XXXX
CONTRACT NO.
FILE NO. FILE NUMBER

U.S. ARMY ENGINEER DISTRICT
CORPS OF ENGINEERS
WALLA WALLA, WASHINGTON

MCNARY LOCK AND DAM
COLUMBIA RIVER, OREGON AND WASHINGTON
JUVENILE FISH FACILITY –
OUTFALL PIPE RELOCATION – FY2010
PARTIAL SITE PLAN

Sheet number:
S–102

L:\MNA\CAD\MFF2\MFF2S-102---.DGN

BORDER SIZE IS ANSI D

$TIME DATE AND TIME PLOTTED:20-DEC-2010 09:36 DESIGN FILE:L:\MNA\CAD\MFF2\MFF2S-102---.DGN SCALE$SCALE$ USERNAME$USER$

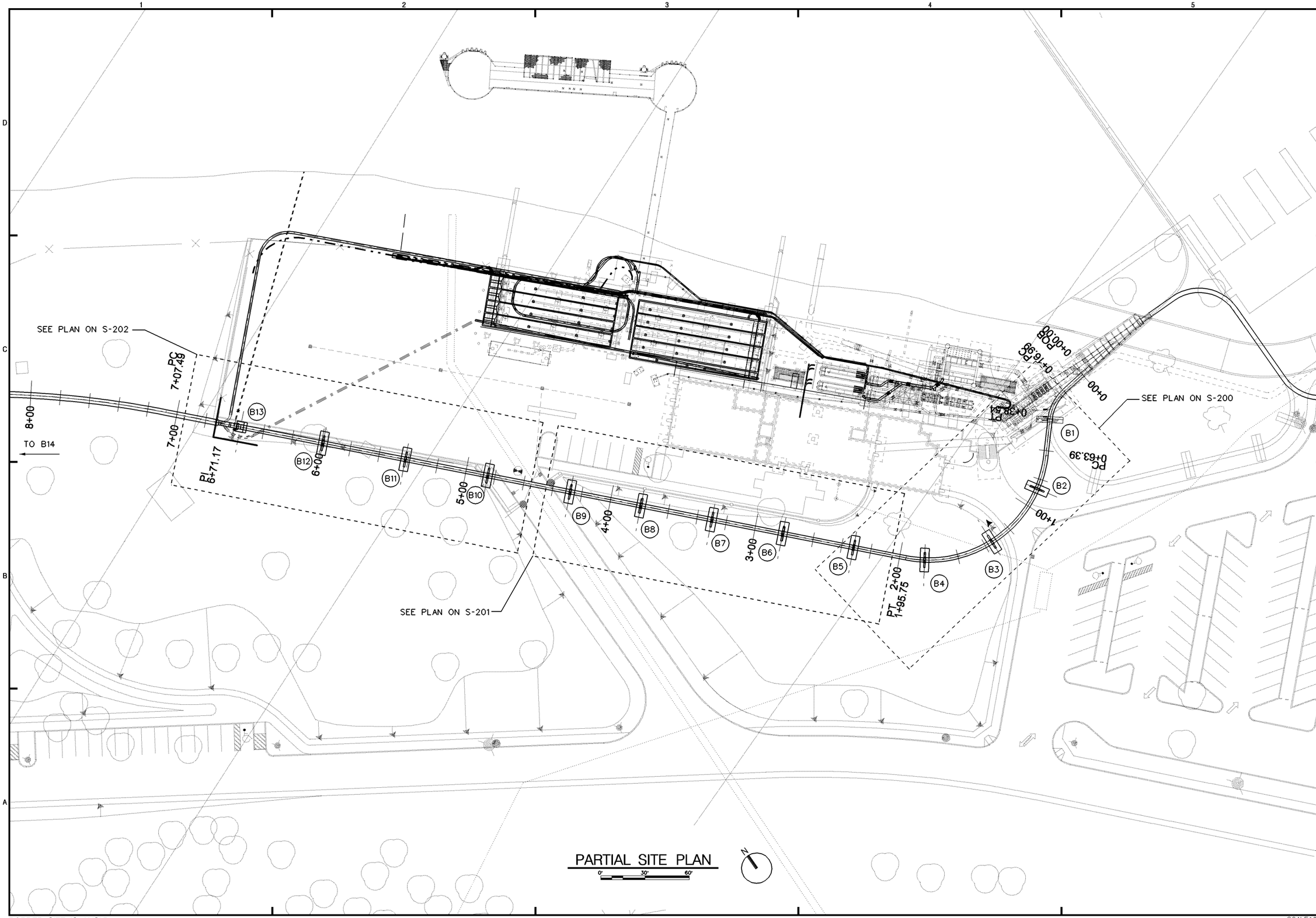

US Army Corps of Engineers
Walla Walla District

Symbol	Description	Date	Appr.	Symbol	Description	Date	Appr.

60% REVIEW SET

12/20/10

U.S. ARMY ENGINEER DISTRICT
CORPS OF ENGINEERS
WALLA WALLA, WASHINGTON

DESIGNED BY: ROSHANI
DWN BY:
CHKED BY:
CHK BY:
SUBMITTED BY: R. HOLLENBECK
CHIEF, STRUCT. DES. SEC.
DATE: DY MON YR
SOLICITATION NO. XX-B-XXXX
CONTRACT NO.
FILE NO.: FILE NUMBER

MONARY LOCK AND DAM
COLUMBIA RIVER, OREGON AND WASHINGTON
JUVENILE FISH FACILITY –
OUTFALL PIPE RELOCATION – FY2010
PARTIAL SITE PLAN

Sheet number:
S–103

L:\MNA\CAD\MFF2\MFF2S-103---.DGN

BORDER SIZE IS ANSI D

$TIME DATE AND TIME PLOTTED:20-DEC-2010 09:36 DESIGN FILE:L:\MNA\CAD\MFF2\MFF2S-103---.DGN SCALE$SCALE$ USERNAME$USER$

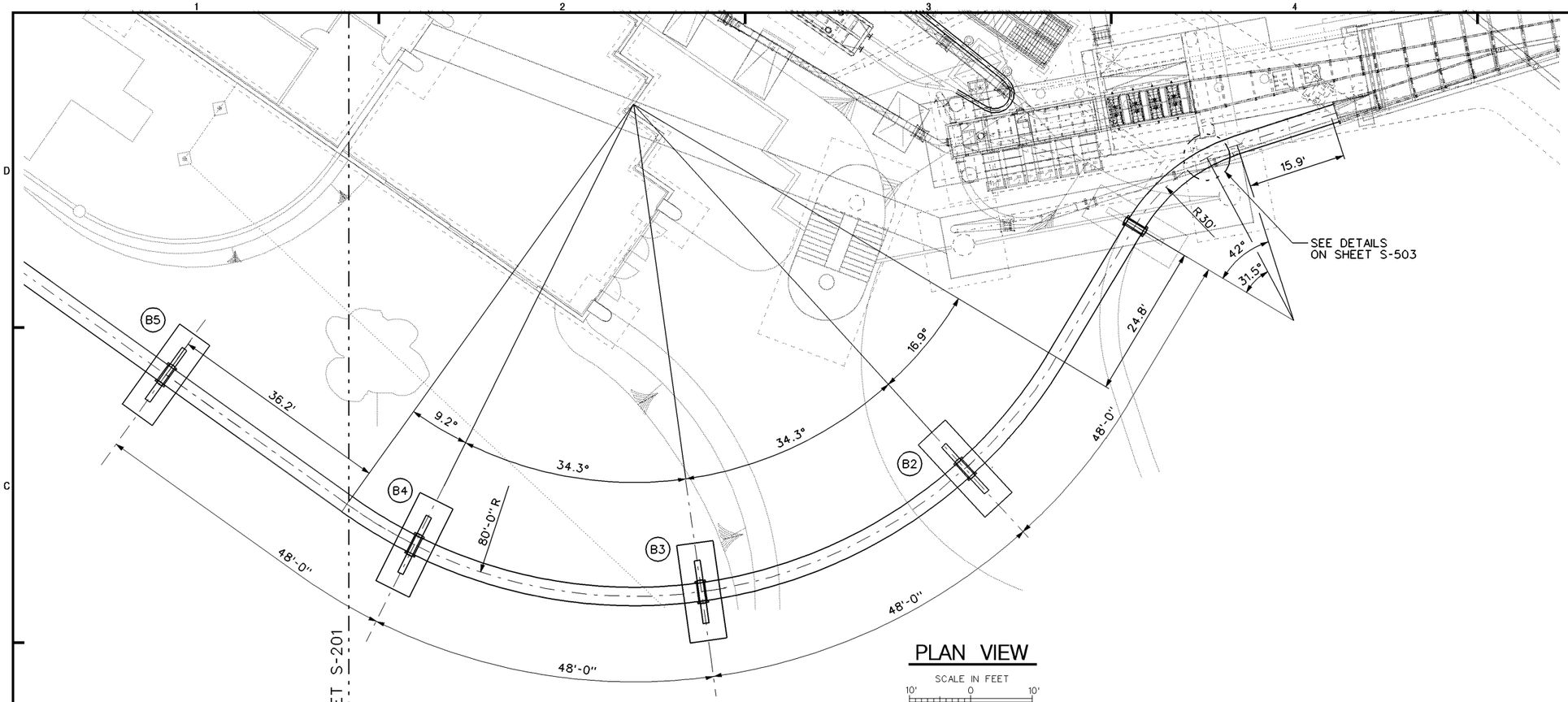

PLAN VIEW

SCALE IN FEET
10' 0 10'

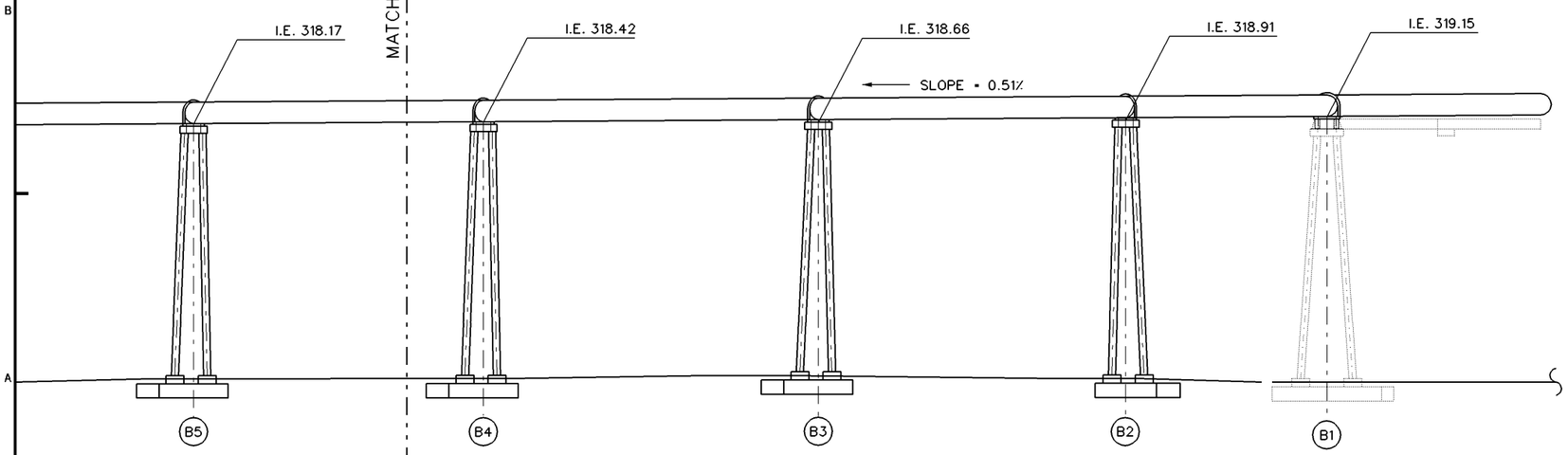

ELEVATION VIEW

SCALE IN FEET
10' 0 10'

US Army Corps of Engineers
Walla Walla District

Symbol	Description	Date	App.	Symbol	Description	Date	App.

60% REVIEW SET
12/20/10

DESIGNED BY: DESIGNER'S NAME
DWN BY:
CHKED BY: CHK BY
SUBMITTED BY: SUBMITTER'S NAME
DATE: DY MON YR
SOLICITATION NO. XX-B-XXXX
CONTRACT NO.
F.E. NO.: FILE NUMBER

U.S. ARMY ENGINEER DISTRICT
CORPS OF ENGINEERS
WALLA WALLA, WASHINGTON

MCNARY LOCK AND DAM
COLUMBIA RIVER, OREGON AND WASHINGTON
JUVENILE FISH FACILITY – FY2010
OUTFALL PIPE RELOCATION – FY2010
SHEET TITLE LINE 1
SHEET TITLE LINE 2
SHEET TITLE LINE 3

Sheet number:
S–200

L:\MNA\CAD\MFF2\MFF2S-200C---.DGN

BORDER SIZE IS ANSI D

$TIME DATE AND TIME PLOTTED:20-DEC-2010 09:36 DESIGN FILE:L:\MNA\CAD\MFF2\MFF2S-200C---.DGN SCALE$SCALE$ USERNAME$USER$

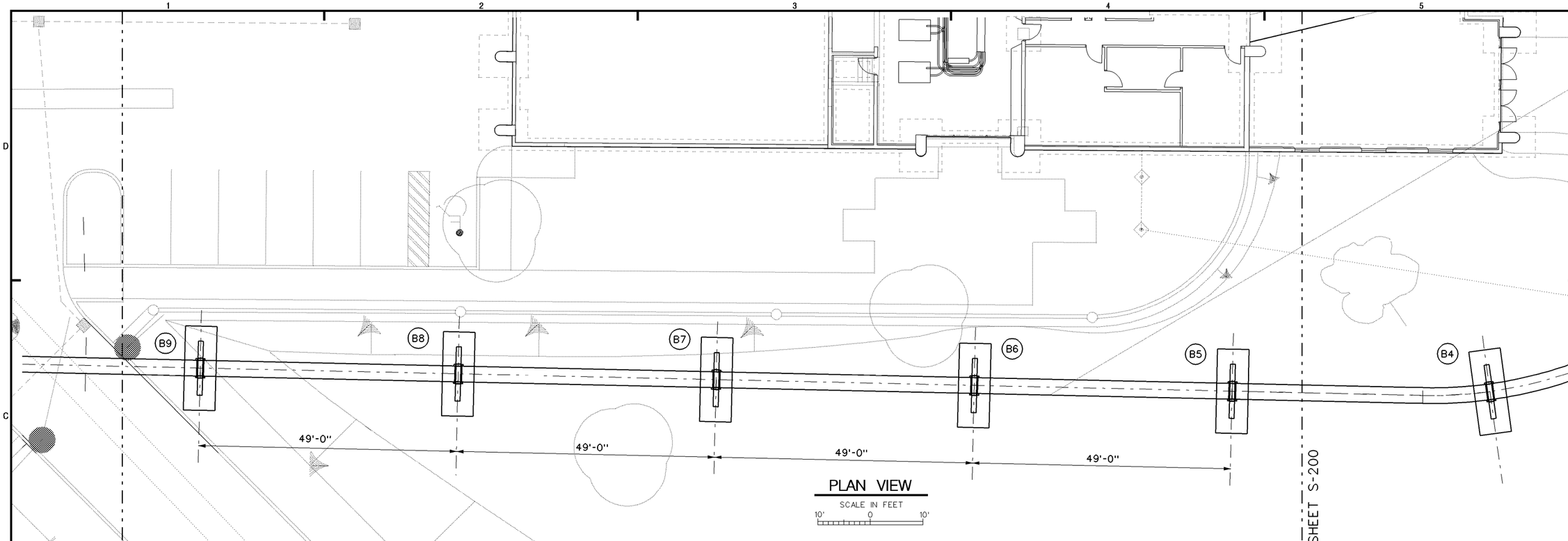

PLAN VIEW

SCALE IN FEET 10' 0 10'

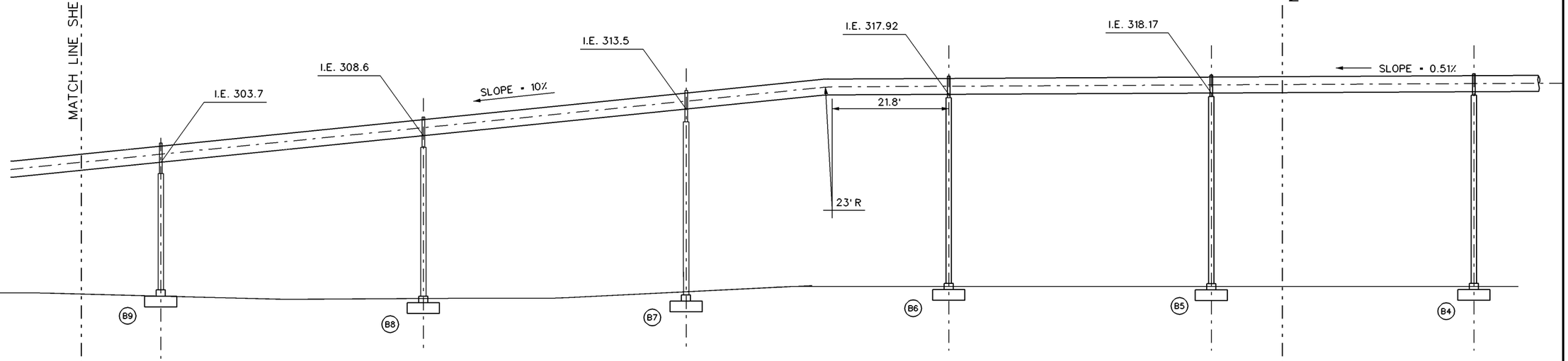

A SOUTH ELEVATION

SCALE IN FEET 10' 0 10'

US Army Corps of Engineers
Walla Walla District

Symbol	Description	Date	App	Symbol	Description	Date	App

60% REVIEW SET
12/20/10

DESIGNED BY: DESIGNER'S NAME
DWN BY: DWN BY
CHKED BY: CHK BY
SUBMITTED BY: SUBMITTER'S NAME
DATE: DY MON YR
SOLICITATION NO. XX-B-XXXX
CONTRACT NO.
FILE NO.: FILE NUMBER

U.S. ARMY ENGINEER DISTRICT
CORPS OF ENGINEERS
WALLA WALLA, WASHINGTON

MCNARY LOCK AND DAM
COLUMBIA RIVER OREGON AND WASHINGTON
JUVENILE FISH FACILITY -
OUTFALL PIPE RELOCATION - FY2010
SHEET TITLE LINE 1
SHEET TITLE LINE 2
SHEET TITLE LINE 3

Sheet number:
S-201

L:\MNA\CAD\MFF2\MFF2S-201C---.DGN

BORDER SIZE IS ANSI D

$TIME DATE AND TIME PLOTTED:20-DEC-2010 09:35 DESIGN FILE:L:\MNA\CAD\MFF2\MFF2S-201C---.DGN SCALE$SCALE$ USERNAME$USER$

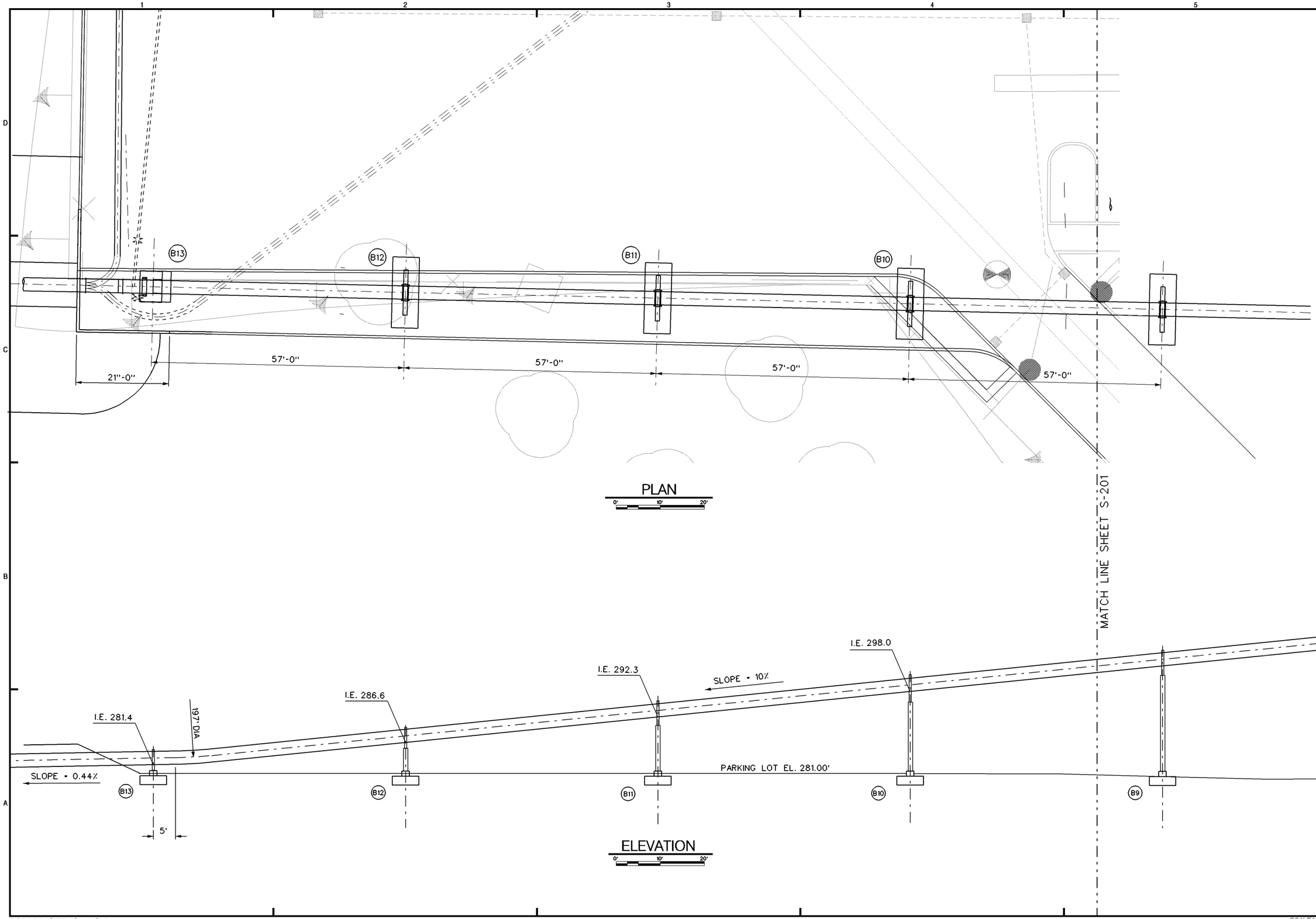

US Army Corps of Engineers
Walla Walla District

Symbol	Description	Date	App.	Symbol	Description	Date	App.

60% REVIEW SET
12/20/10

DESIGNED BY:
DATE: DY MON YR
DWN BY:
CHKED BY:
SOLICITATION NO. XX-B-XXXX
SUBMITTED BY:
CONTRACT NO.
FILE NO.:

U.S. ARMY ENGINEER DISTRICT
CORPS OF ENGINEERS
WALLA WALLA, WASHINGTON

MONARY LOCK AND DAM
COLUMBIA RIVER, OREGON AND WASHINGTON
JUVENILE FISH FACILITY –
OUTFALL PIPE RELOCATION – FY2010

Sheet number:
S–202

L:\MNA\CAD\MFF2\MFF2S-202C---.DGN

BORDER SIZE IS ANSI D

$TIME DATE AND TIME PLOTTED:20-DEC-2010 09:35 DESIGN FILE:L:\MNA\CAD\MFF2\MFF2S-202C---.DGN SCALE$SCALE$ USERNAME$USER$

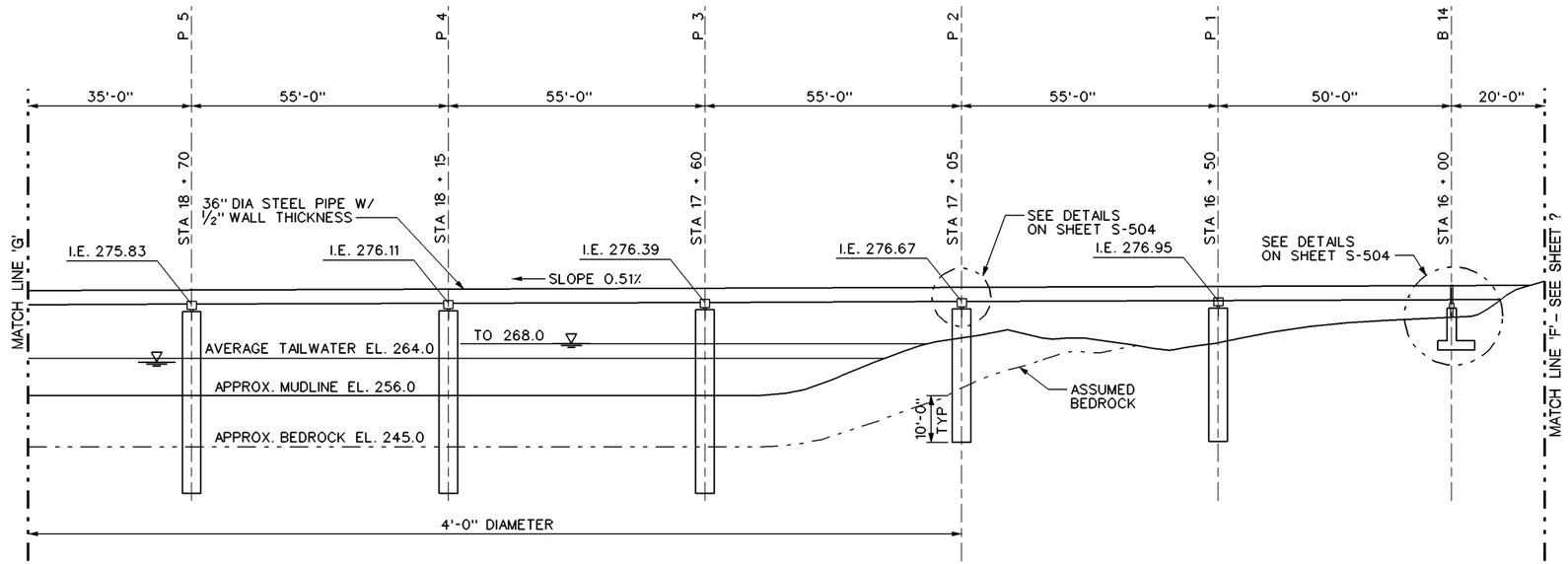

1 PROFILE :

0' 16' 32'

NOTE:

SEAT PIPE CASINGS ONE FOOT INTO BEDROCK.
DRILL 48" AND 60" HOLES TEN FEET INTO BEDROCK.
REMOVE DEBRIS FROM HOLES AND PLACE REINFORCEMENT
BAR CAGES INSIDE PIPE CASINGS AND HOLES.
TRIMIE CONCRETE TO TOP OF PIPE CASINGS.

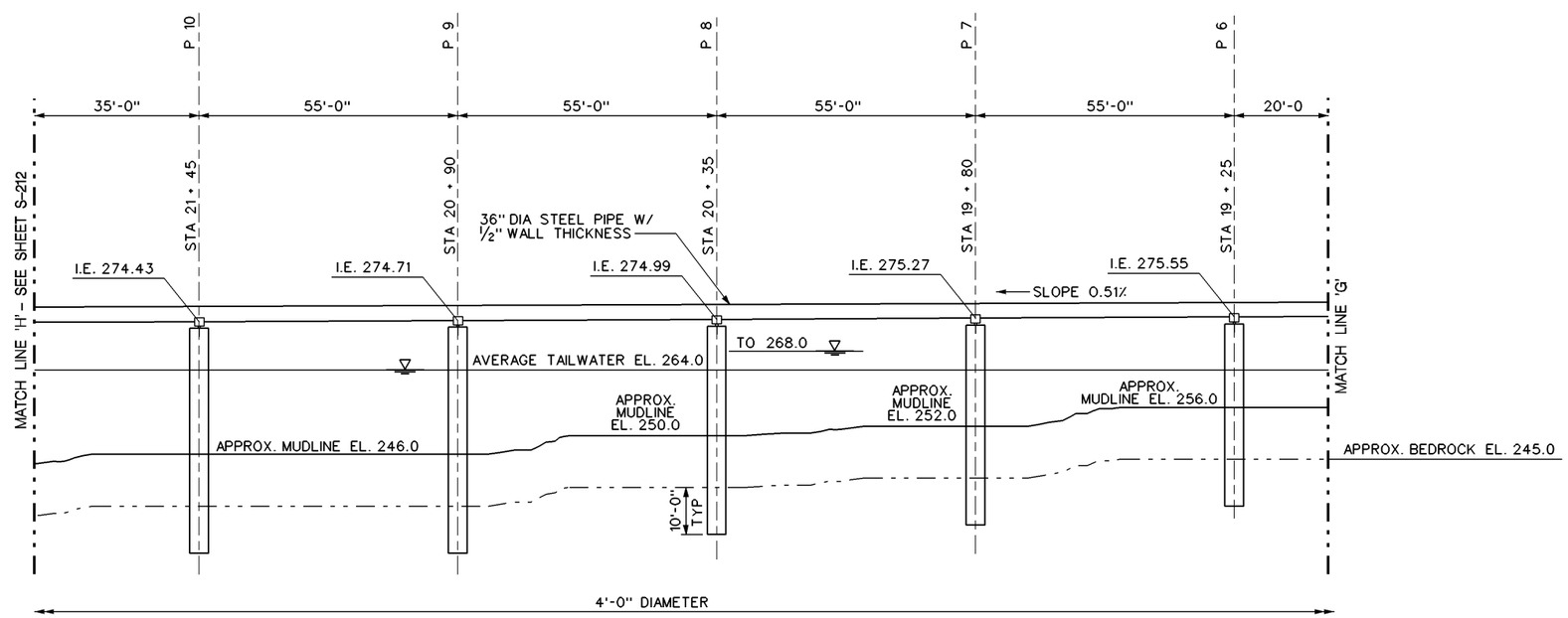

2 PROFILE :

0' 16' 32'

US Army Corps of Engineers
Walla Walla District

Symbol	Description	Date	Appr.	Symbol	Description	Date	Appr.

60% REVIEW SET
12/20/10

DESIGNED BY: LIGHTBODY
DWN BY:
CHKED BY: N
SUBMITTED BY: N
CHIEF, STRUCT. DES. SEC.
DATE: DY MON YR
SOLICITATION NO. XX-B-XXXX
CONTRACT NO.
FILE NO.: FN

U.S. ARMY ENGINEER DISTRICT
CORPS OF ENGINEERS
WALLA WALLA, WASHINGTON

MONARY LOCK AND DAM
COLUMBIA RIVER, OREGON AND WASHINGTON
JUVENILE FISH FACILITY –
OUTFALL PIPE RELOCATION – FY2010
OPTION 3
PROFILES 4

Sheet number:
S–211

L:\MNA\CAD\MFF2\MFF2S-211B---.DGN

BORDER SIZE IS ANSI D

$TIME DATE AND TIME PLOTTED:20-DEC-2010 09:35 DESIGN FILE:L:\MNA\CAD\MFF2\MFF2S-211B---.DGN SCALE$SCALE$ USERNAME$USER$

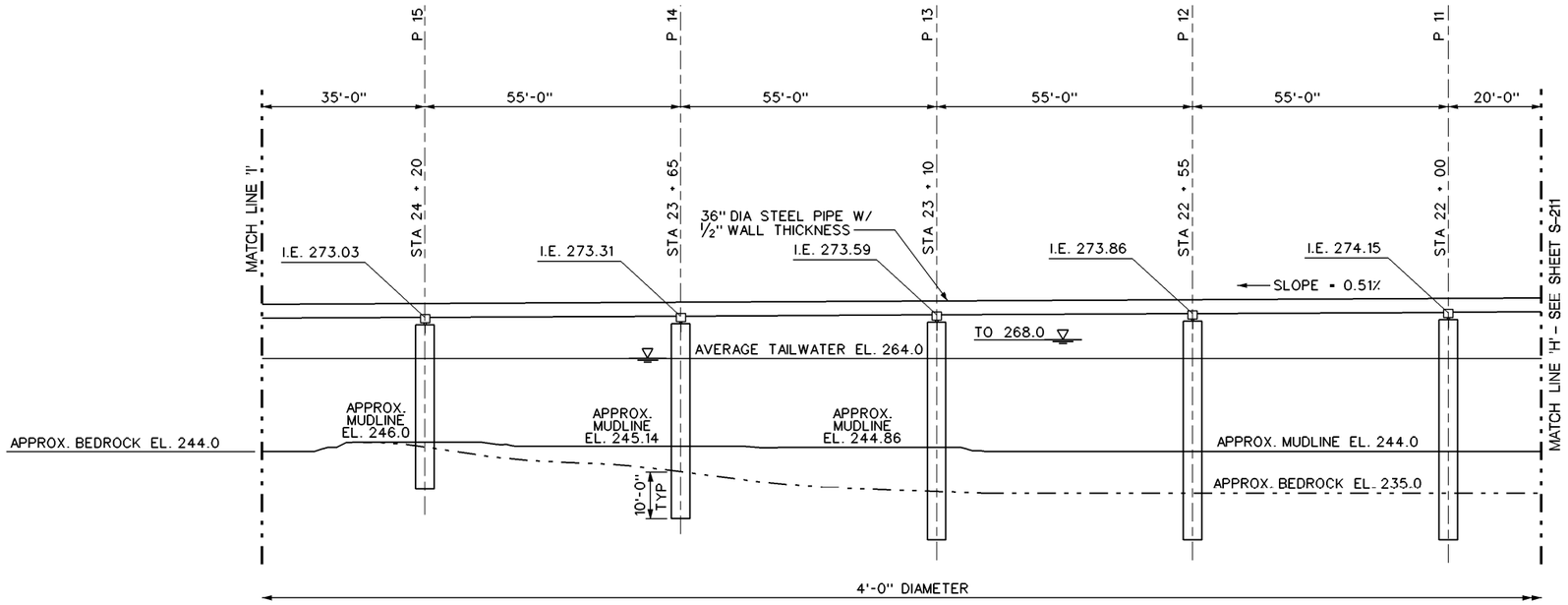

3 PROFILE :

0' 16' 32'

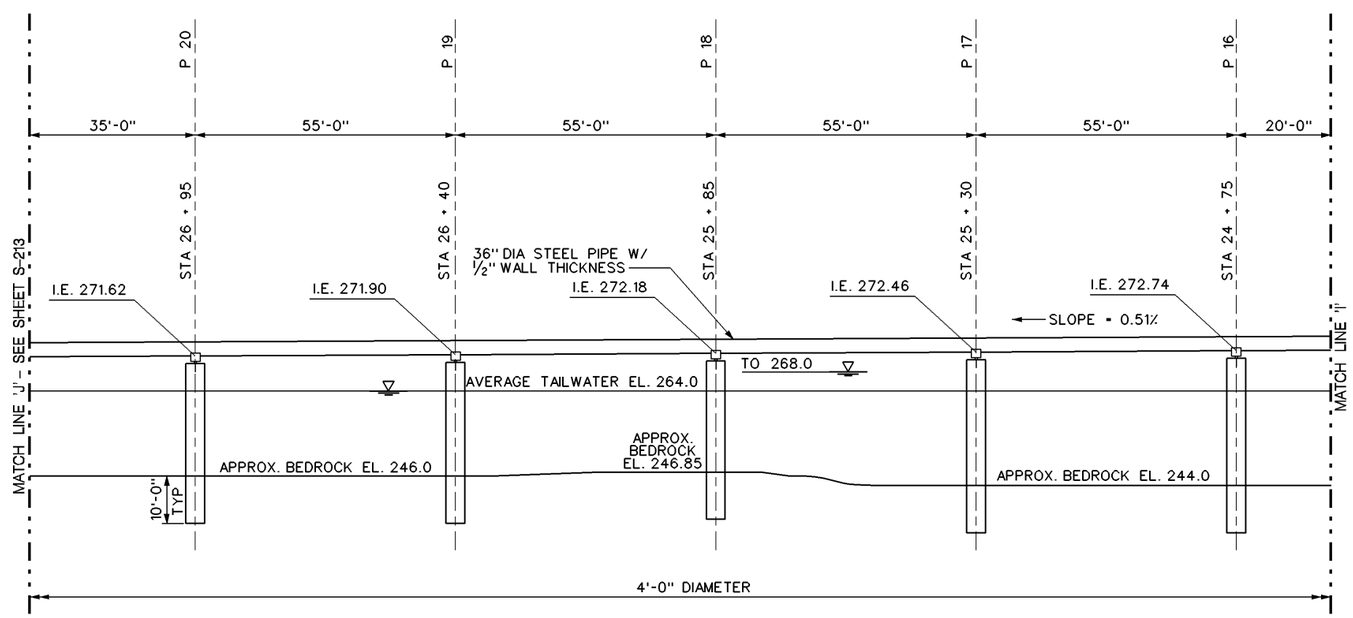

4 PROFILE :

0' 16' 32'

US Army Corps of Engineers
Walla Walla District

Symbol	Description	Date	App.	Symbol	Description	Date	App.

60% REVIEW SET

12/20/10

DESIGNED BY: LIGHTBODY
DWN BY:
CHKED BY: N
SUBMITTED BY: N
CHIEF STRUCT. DES. SEC.
DATE: DY MON YR
SOLICITATION NO. XX-B-XXXX
CONTRACT NO.
FILE NO: FN

U.S. ARMY ENGINEER DISTRICT
CORPS OF ENGINEERS
WALLA WALLA, WASHINGTON

MCNARY LOCK AND DAM
COLUMBIA RIVER, OREGON AND WASHINGTON
JUVENILE FISH FACILITY –
OUTFALL PIPE RELOCATION – FY2010
OPTION 3
PROFILES 5

Sheet number:
S–212

L:\MNA\CAD\MFF2\MFF2S-212B---.DGN

BORDER SIZE IS ANSI D

$TIME DATE AND TIME PLOTTED:20-DEC-2010 09:35 DESIGN FILE:L:\MNA\CAD\MFF2\MFF2S-212B---.DGN SCALE$SCALE$ USERNAME$USER$

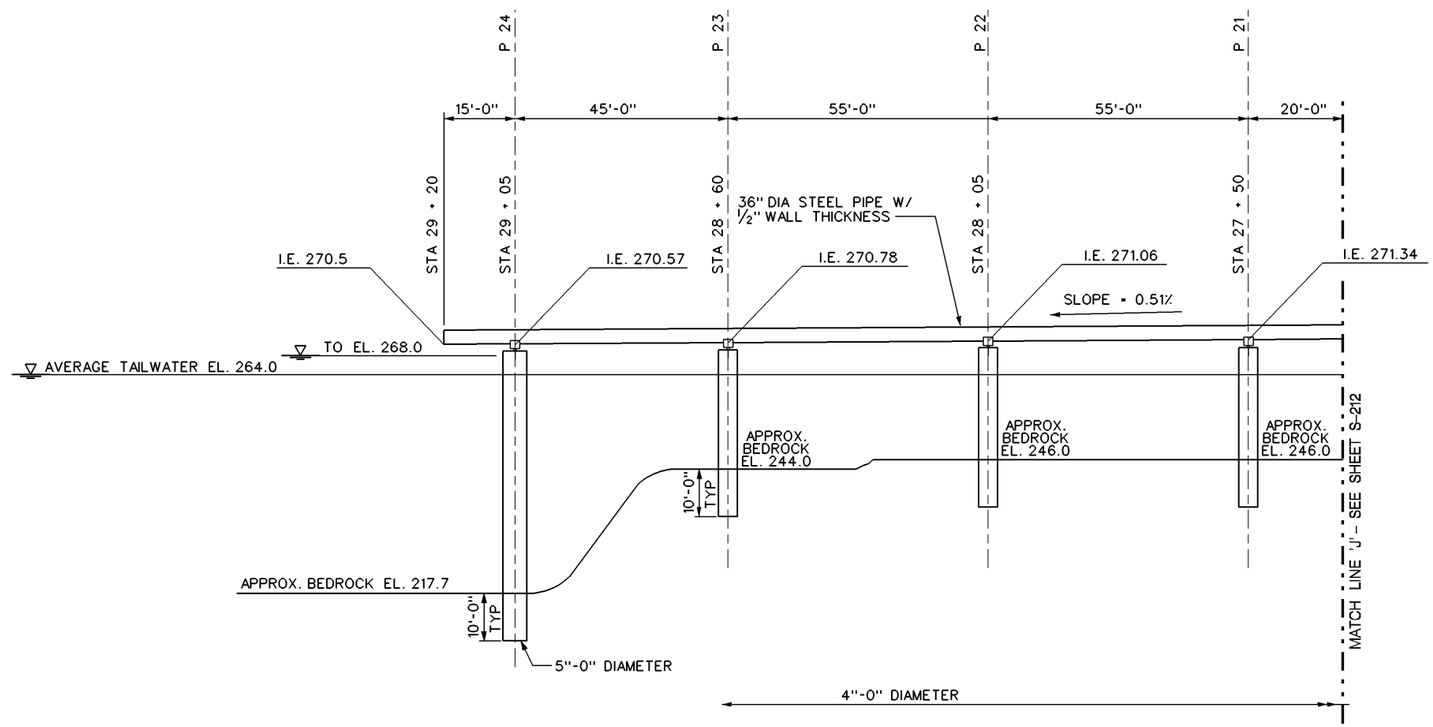

5 PROFILE :

0' 16' 32'

US Army Corps of Engineers
Walla Walla District

60% REVIEW SET
12/20/10

Symbol	Description	Date	Appr.	Symbol	Description	Date	Appr.

DESIGNED BY: LIGHTBODY
DWN BY:
CHKED BY: N
DATE: DY MON YR
SOLICITATION NO. XX-B-XXXX
CONTRACT NO.
SUBMITTED BY: R. HOLLENBECK CHIEF STRUCT. DES. SEC.
FILE NO.: FN

U.S. ARMY ENGINEER DISTRICT
CORPS OF ENGINEERS
WALLA WALLA, WASHINGTON

MCNARY LOCK AND DAM
COLUMBIA RIVER OREGON AND WASHINGTON
JUVENILE FISH FACILITY – FY2010
OUTFALL PIPE RELOCATION
OPTION 3
PROFILES 6

Sheet number:
S–213

L:\MNA\CAD\MFF2\MFF2S-213B---.DGN

BORDER SIZE IS ANSI D

$TIME DATE AND TIME PLOTTED:20-DEC-2010 09:35 DESIGN FILE:L:\MNA\CAD\MFF2\MFF2S-213B---.DGN SCALE$SCALE$ USERNAME$USER$

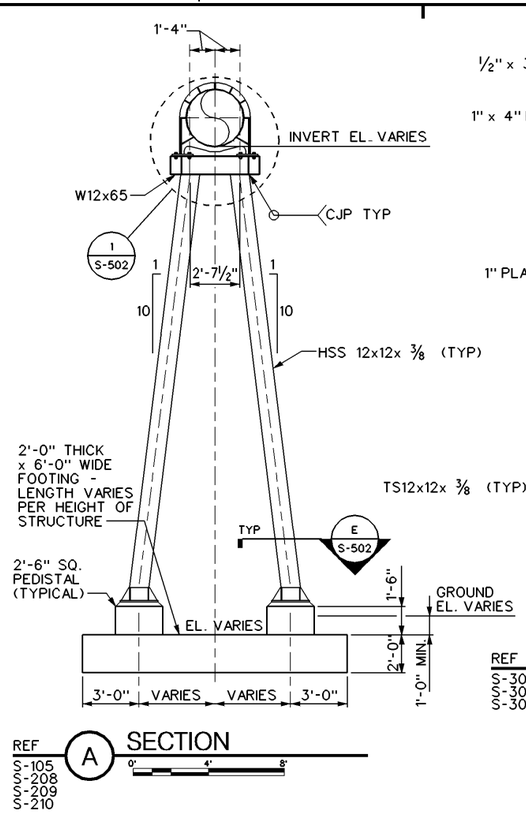

REF S-105 S-208 S-209 S-210 — A SECTION

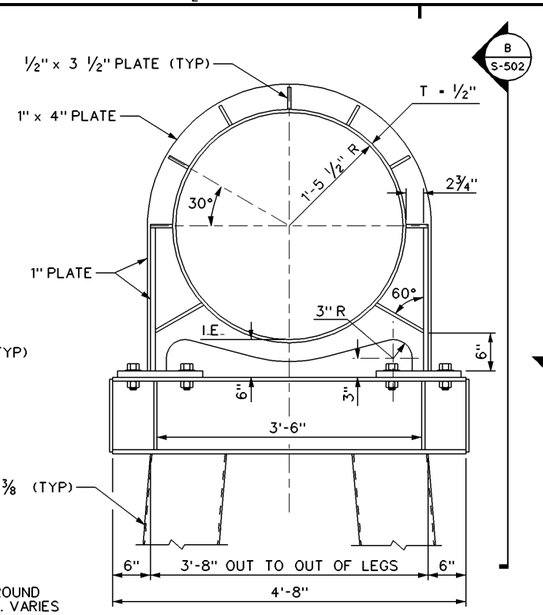

REF S-302 S-303 S-304 — 1 TYPICAL RING GIRDER DETAIL

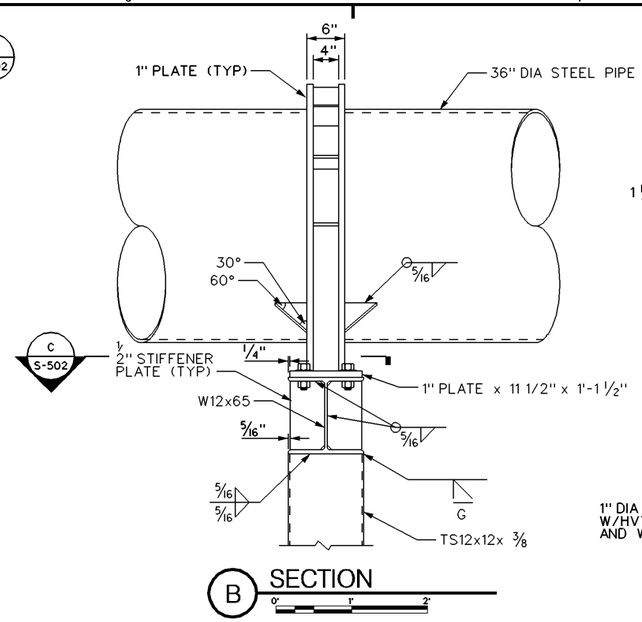

B SECTION

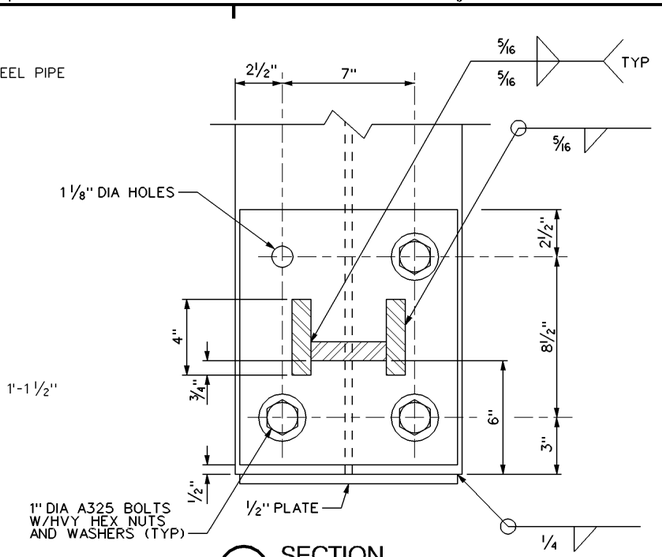

C SECTION

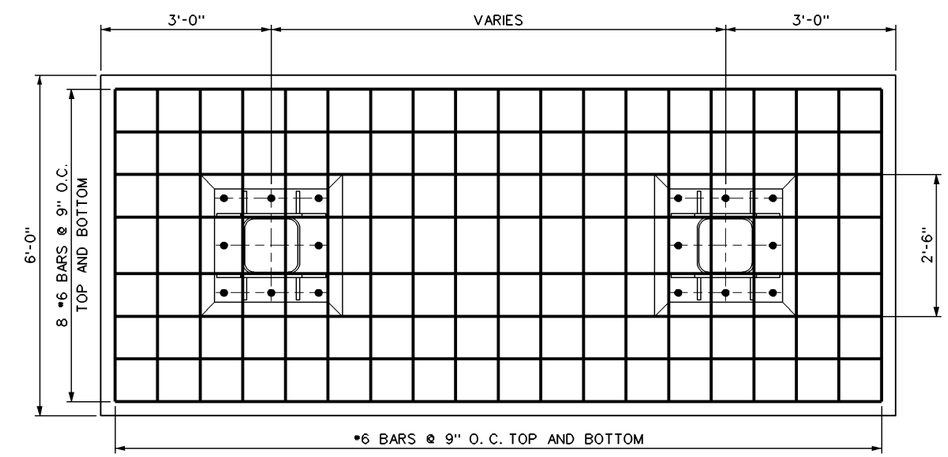

PLAN VIEW

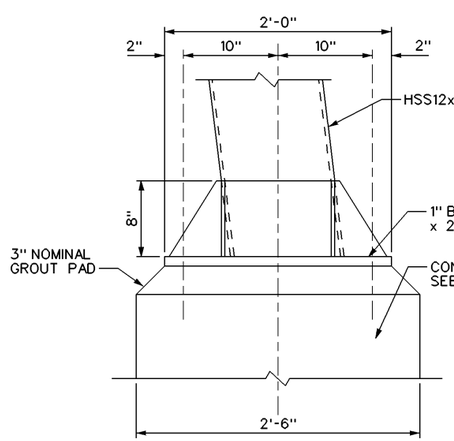

REF S-502 — D SECTION

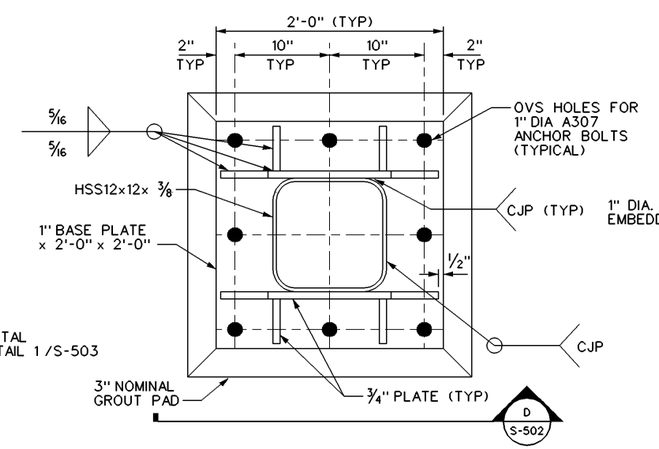

REF S-502 — E SECTION

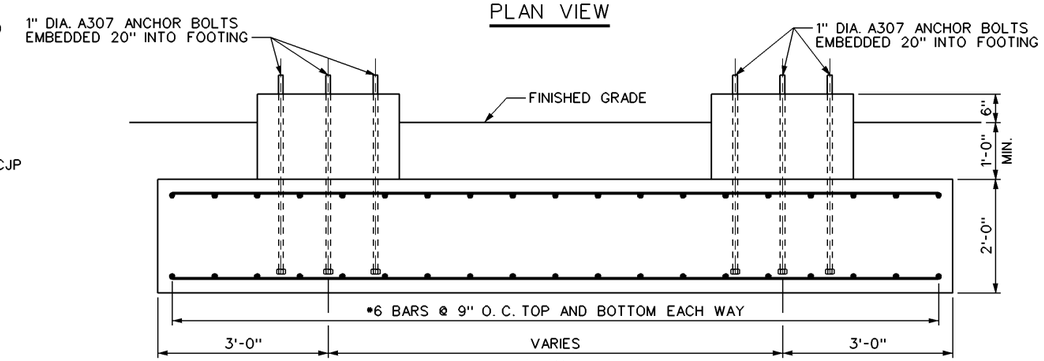

ELEVATION VIEW

DETAIL: FOOTING REINFORCEMENT

US Army Corps of Engineers
Walla Walla District

60% REVIEW SET
12/20/10

Symbol	Description	Date	App. Symbol	Description	Date	App.

DESIGNED BY: LIGHTBODY
DWN BY:
CHKED BY: N
DATE: DY MON YR
SOLICITATION NO. XX-B-XXXX
CONTRACT NO.
SUBMITTED BY: R. HOLLENBECK CHIEF, STRUCT. DES. SEC.
FILE NO: FN

U.S. ARMY ENGINEER DISTRICT
CORPS OF ENGINEERS
WALLA WALLA, WASHINGTON

MONARY LOCK AND DAM
COLUMBIA RIVER, OREGON AND WASHINGTON
JUVENILE FISH FACILITY – OUTFALL PIPE RELOCATION – FY2010
OPTION 2
SECTIONS AND DETAILS 1

Sheet number:
S–502

L:\MNA\CAD\MFF2\MFF2S-502---.DGN

BORDER SIZE IS ANSI D

$TIME DATE AND TIME PLOTTED:20-DEC-2010 09:35 DESIGN FILE:L:\MNA\CAD\MFF2\MFF2S-502---.DGN SCALE$SCALE$ USERNAME$USER$

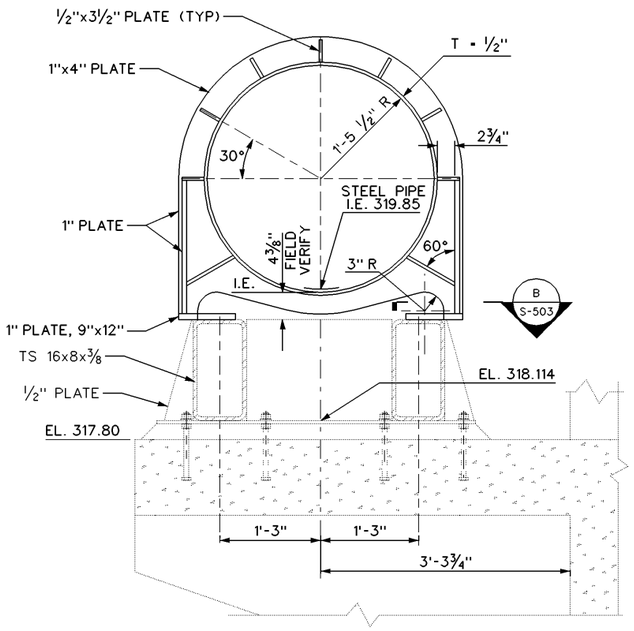

REF S-107 S-503 (C) ELEVATION 0' 1' 2'

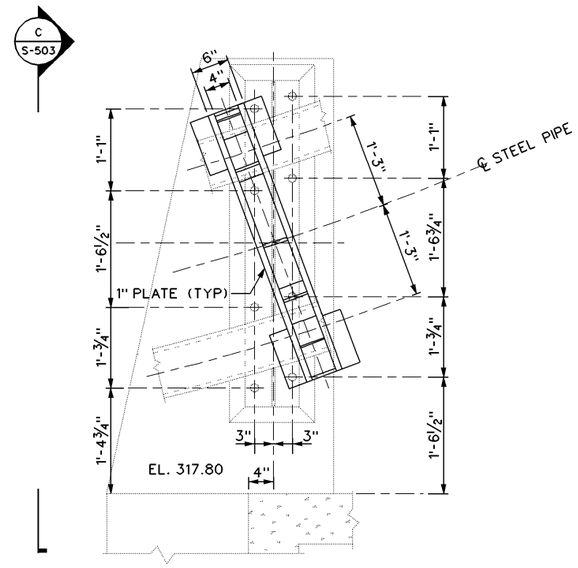

REF S-107 (A) DETAIL 0' 1' 2'

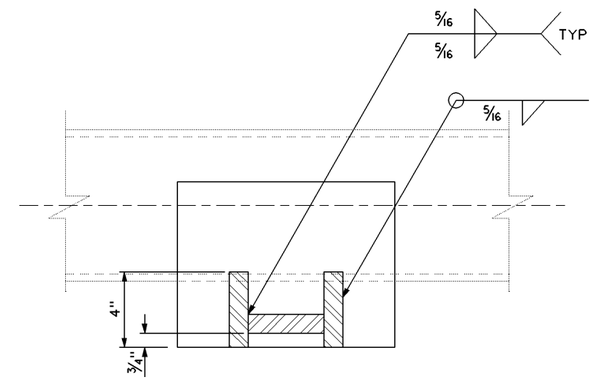

(B) SECTION 0' 1' 2'

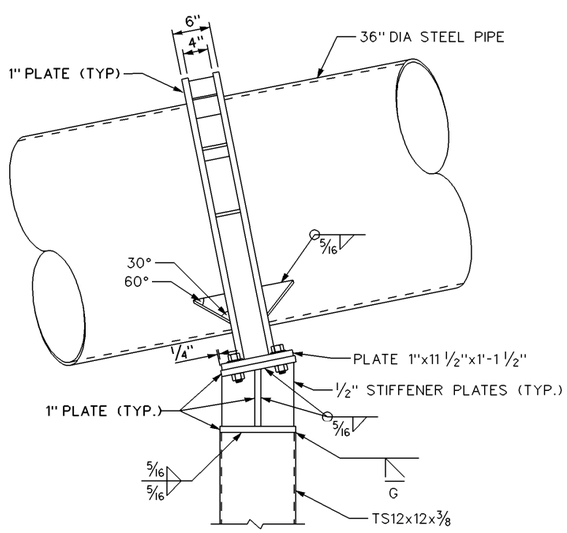

REF S-200 S-201 (D) BENTS #9, 10 AND 11 0' 1' 2'

US Army Corps of Engineers
Walla Walla District

60% REVIEW SET
12/20/10

Symbol	Description	Date	App'd	Symbol	Description	Date	App'd

DESIGNED BY: LIGHTBODY
DWN BY:
CHKED BY: N
SUBMITTED BY: R. HOLLENBECK CHIEF STRUCT. DES. SEC.
DATE: DY MON YR
SOLICITATION NO. XX-B-XXXX
CONTRACT NO.
FILE NO.: FN

U.S. ARMY ENGINEER DISTRICT
CORPS OF ENGINEERS
WALLA WALLA, WASHINGTON

MONARY LOCK AND DAM
COLUMBIA RIVER, OREGON AND WASHINGTON
JUVENILE FISH FACILITY – OUTFALL PIPE RELOCATION – FY2010
OPTION 2
SECTIONS AND DETAILS 1

Sheet number:
S–503

L:\MNA\CAD\MFF2\MFF2S-503---.DGN

BORDER SIZE IS ANSI D

$TIME DATE AND TIME PLOTTED:20-DEC-2010 09:35 DESIGN FILE:L:\MNA\CAD\MFF2\MFF2S-503---.DGN SCALE$SCALE$ USERNAME$USER$

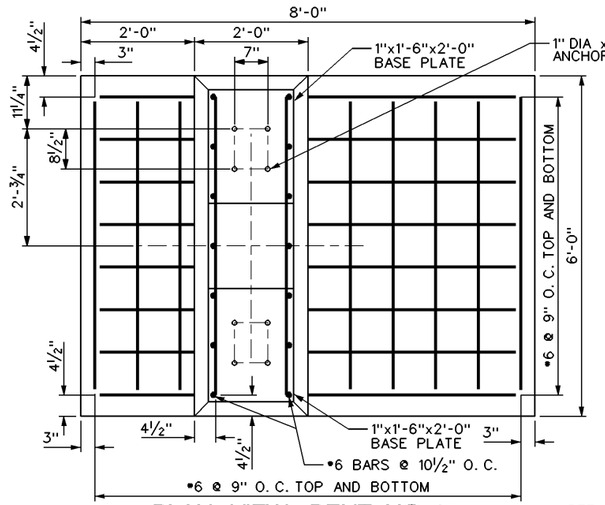

PLAN VIEW BENT NO. 14

(36" DIA. STEEL PIPE NOT SHOWN FOR CLARITY)

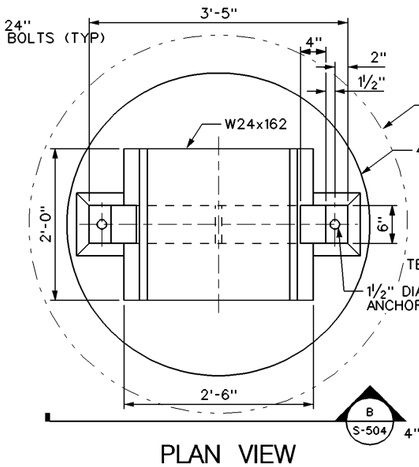

PLAN VIEW

REF S-504 (A) PIER SLIDER PIPE SUPPORT

(36" DIA. STEEL PIPE NOT SHOWN FOR CLARITY)

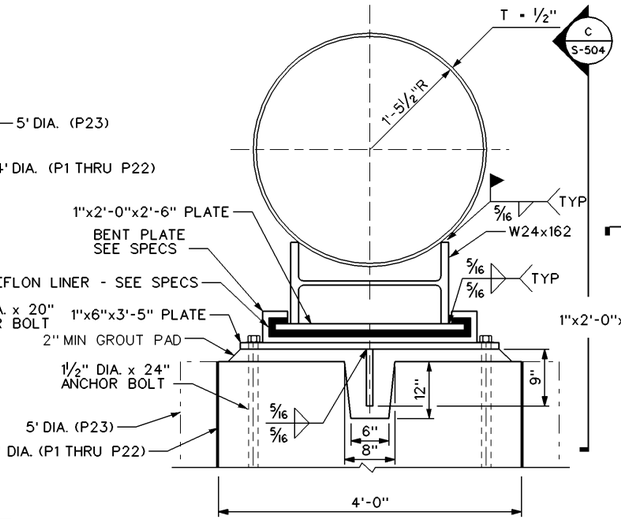

REF S-504 (B) DETAIL

NOT TO SCALE

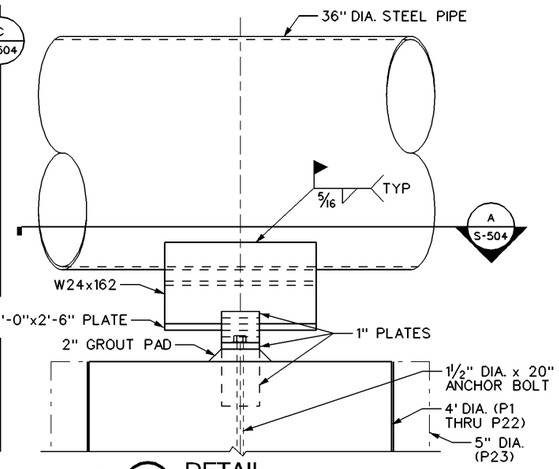

REF S-504 (C) DETAIL

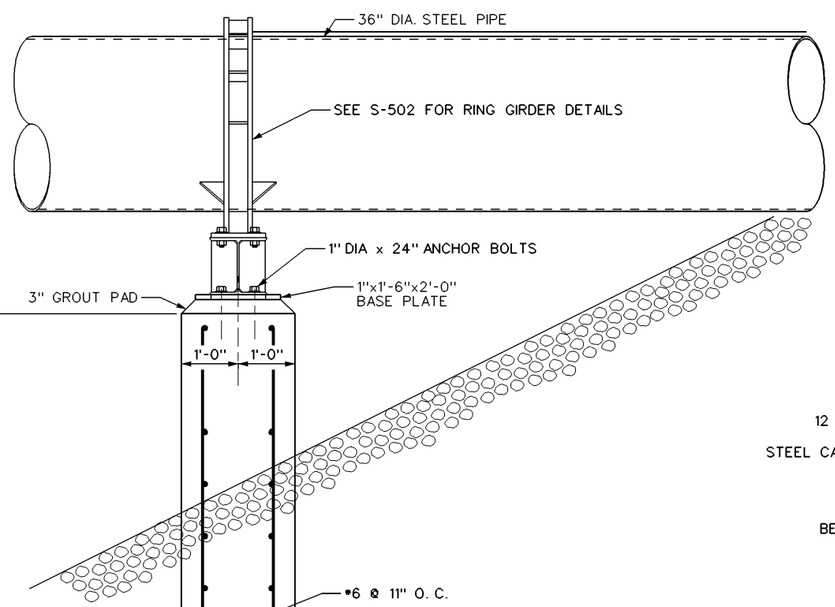

PLAN VIEW BENT NO. 14

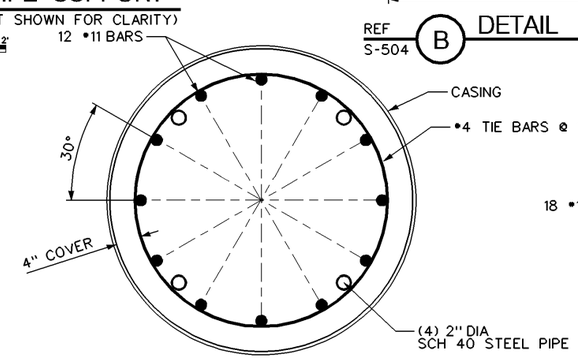

PLAN VIEW

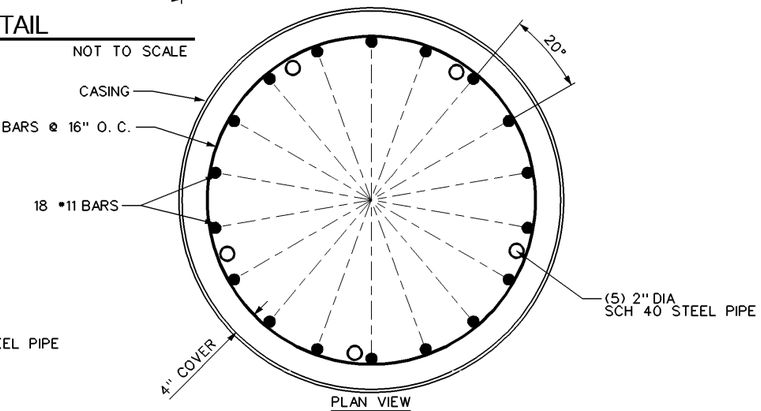

PLAN VIEW

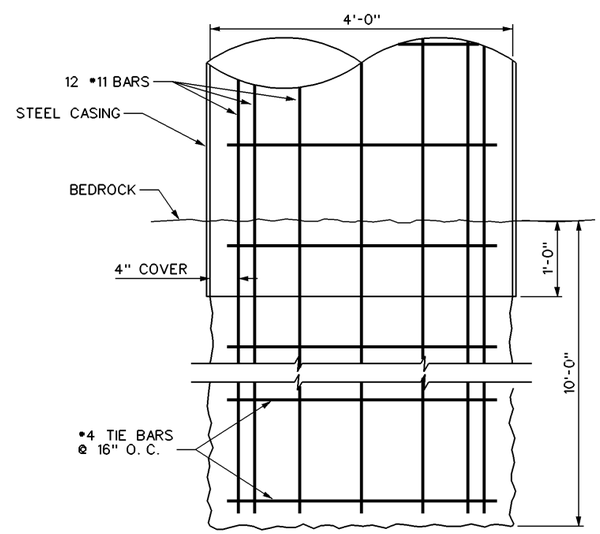

ELEVATION VIEW

DETAIL : PIER #1 THRU 22

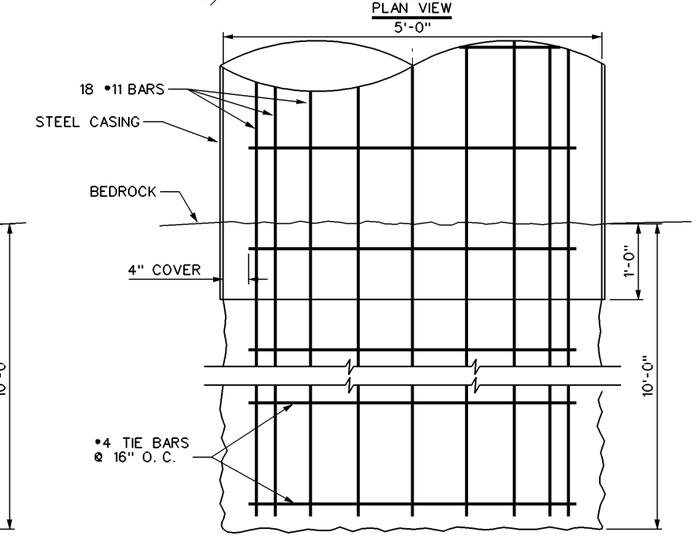

ELEVATION VIEW

DETAIL : PIER #23

NOTES :

1. THE TYPE, SIZE, QUALITY, AND STRENGTH OF STEEL CASING SHALL BE THE CONTRACTOR'S RESPONSIBILITY AND SUBMITTED TO THE CONTRACTING OFFICER'S REPRESENTATIVE PRIOR TO CONSTRUCTION.

US Army Corps of Engineers
Walla Walla District

60% REVIEW SET
12/20/10

Symbol	Description	Date	App. Symbol	Description	Date	App.

DESIGNED BY: LIGHTBODY
DWN BY: E. ROGERS
CHKED BY: N
SUBMITTED BY: R. HOLLENBECK, CHIEF, STRUCT. DES. SEC.
DATE: DY MON YR
SOLICITATION NO. XX-B-XXXX
CONTRACT NO.
FILE NO: FN

U.S. ARMY ENGINEER DISTRICT
CORPS OF ENGINEERS
WALLA WALLA, WASHINGTON

MONARY LOCK AND DAM
COLUMBIA RIVER, OREGON AND WASHINGTON
JUVENILE FISH FACILITY - OUTFALL PIPE RELOCATION - FY2010
OPTION 2
SECTIONS AND DETAILS 1

Sheet number:
S-504

L:\MNA\CAD\MFF2\MFF2S-504---.DGN

BORDER SIZE IS ANSI D

$TIME DATE AND TIME PLOTTED:20-DEC-2010 09:34 DESIGN FILE:L:\MNA\CAD\MFF2\MFF2S-504---.DGN SCALE$SCALE$ USERNAME$USER$

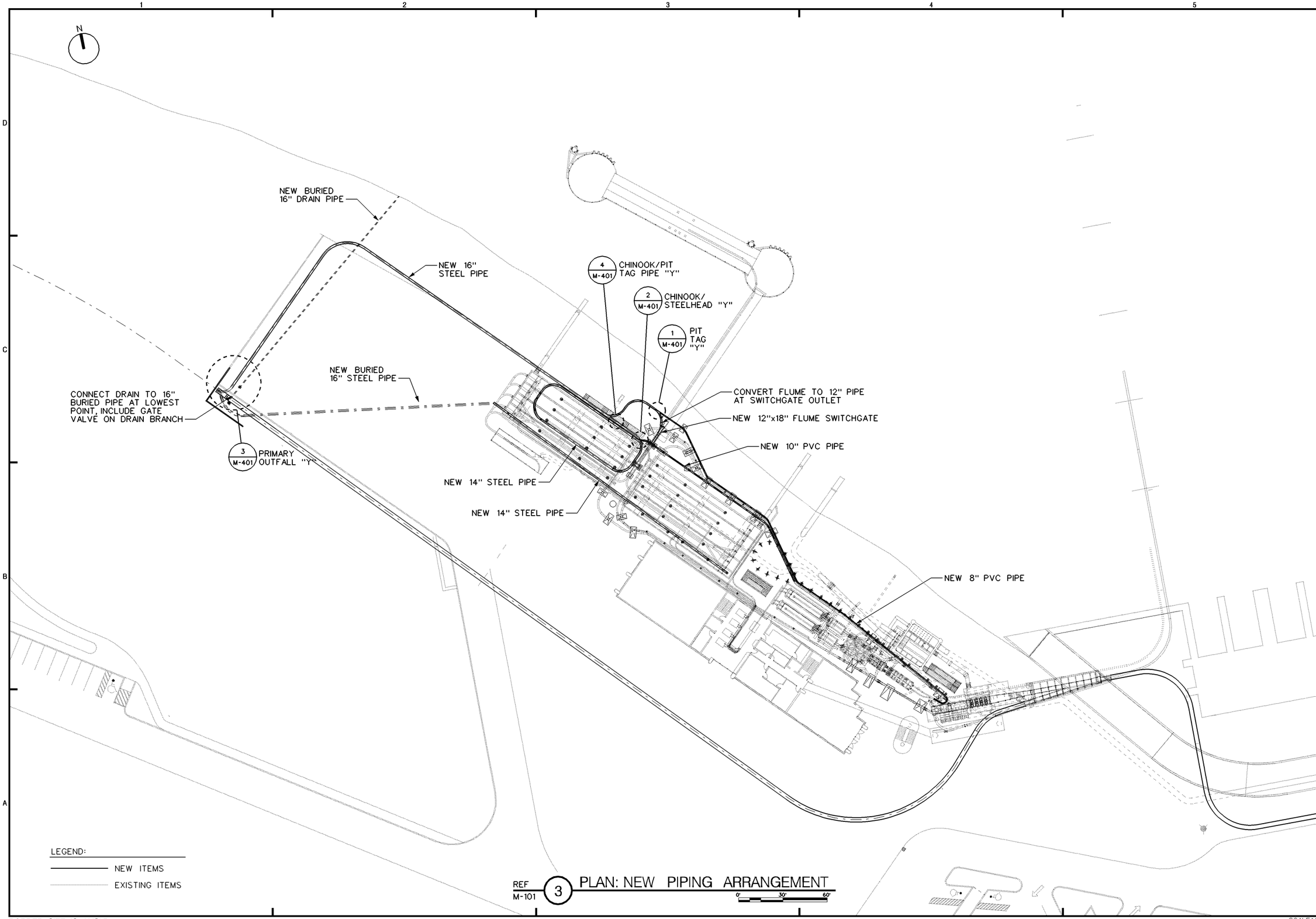

US Army Corps of Engineers
Walla Walla District

60% REVIEW SET
12/20/10

Symbol	Description	Date	Appr.	Symbol	Description	Date	Appr.

DESIGNED BY: P. AUTH
DWN BY: HAUGEN
CHKED BY: CHK BY:
SUBMITTED BY: DWAYNE WESTON CHIEF, MECH. DES. SEC.
DATE: DY MON YR
SOLICITATION NO. XX-B-XXXX
CONTRACT NO.
FILE NO.: FILE NUMBER

U.S. ARMY ENGINEER DISTRICT CORPS OF ENGINEERS WALLA WALLA, WASHINGTON

MCNARY LOCK AND DAM
COLUMBIA RIVER, OREGON AND WASHINGTON
JUVENILE FISH FACILITY – OUTFALL PIPE RELOCATION – FY2010
FISH FACILITY PIPING ARRANGEMENT

Sheet number: M–104

L:\MNA\CAD\MFF2\MFF2M-104---.DGN

BORDER SIZE IS ANSI D

$TIME DATE AND TIME PLOTTED:20-DEC-2010 09:37 DESIGN FILE:L:\MNA\CAD\MFF2\MFF2M-104---.DGN SCALE$SCALE$ USERNAME$USER$

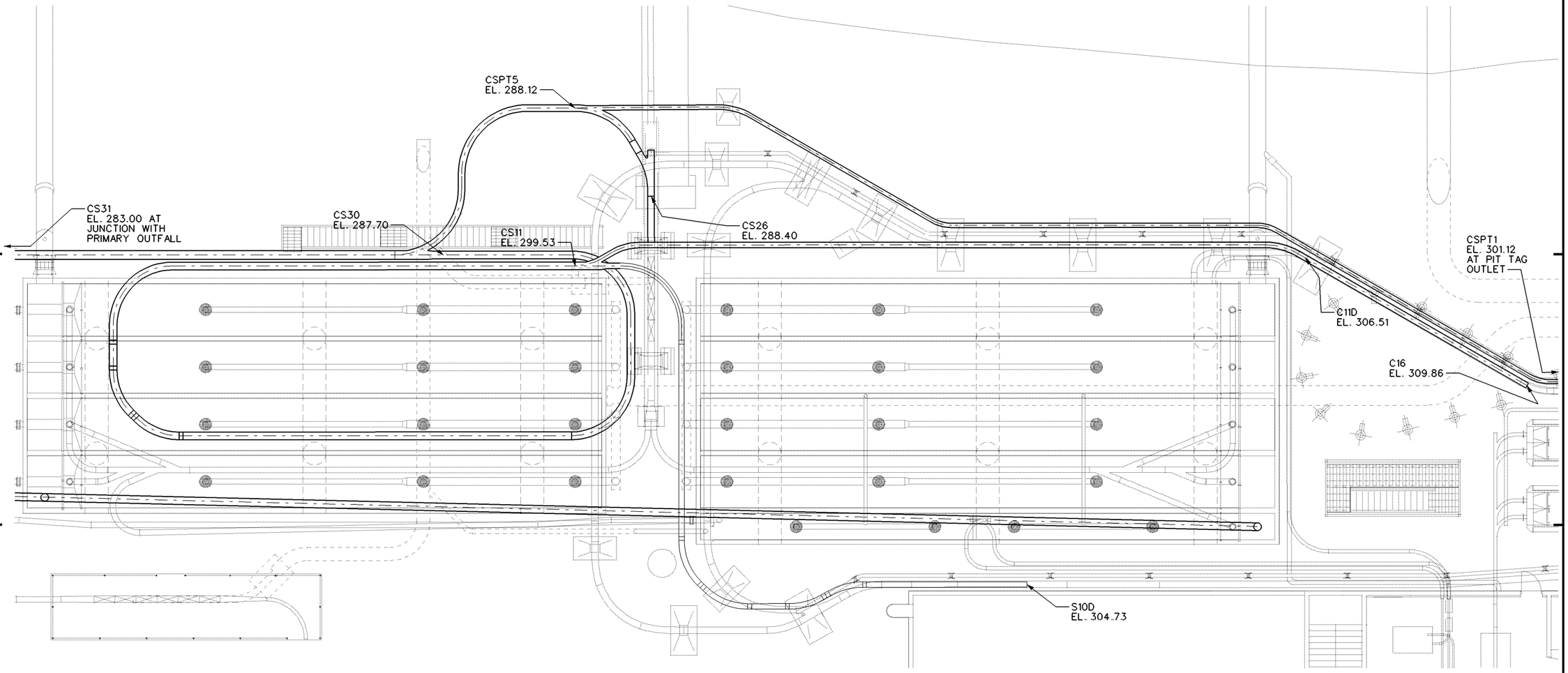

PLAN: PIPE AND FLUME ROUTING

0' 8' 16'

NODE	INV. EL.
C11D	306.51
C16	309.06
S10D	304.73
CS11	299.53
CS26	288.40
CS30	287.70
CS31	283.00
CSPT1	301.12
CSPT5	288.12

PATH	PATH DESCRIPTION	FLUME (F) OR PIPE (P)	DISTANCE (FT)	SLOPE %	DISCHARGE (CFS)
C16 TO C11D	CHINOOK RIVER RELEASE	10" (P)	40	Varies	4.5
C11D TO CS11	CHINOOK RIVER RELEASE	10" (P)	110	6.34	4.5
S10D TO CS11	STEELHEAD RIVER RELEASE	10" (P)	112	4.64	4.5
CS11 TO CS30	RIVER RELEASE	14" (P)	213	5.55	9
CSPT1 TO CSPT5	PIT TAG RELEASE TO RIVER	8" (P)	298	4.36	2
CS26 TO CS30	RIVER RELEASE	12" (P)	54	1.35	3.5
CS30 TO CS31	RIVER RELEASE	16" (P)	345	1.35	12.5

US Army Corps of Engineers
Walla Walla District

Symbol	Description	Date	App.	Symbol	Description	Date	App.

60% REVIEW SET
12/20/10

U.S. ARMY ENGINEER DISTRICT
CORPS OF ENGINEERS
WALLA WALLA, WASHINGTON

DESIGNED BY: P. AUTH
DWN BY: PA/JH
CHKED BY: CHK BY
SUBMITTED BY: DWAYNE WESTON
CHIEF DES. SEC.
DATE: DY MON YR
SOLICITATION NO. XX-B-XXXX
CONTRACT NO.
FILE NUMBER

MCNARY LOCK AND DAM
COLUMBIA RIVER OREGON AND WASHINGTON
JUVENILE FISH FACILITY – OUTFALL PIPE RELOCATION – FY2010
FISH FACILITY
PIPELINE CONTROL POINTS

Sheet number:
M–105

L:\MNA\CAD\MFF2\MFF2M-105---.DGN

BORDER SIZE IS ANSI D

$TIME DATE AND TIME PLOTTED:20-DEC-2010 09:37 DESIGN FILE:L:\MNA\CAD\MFF2\MFF2M-105---.DGN SCALE$SCALE$ USERNAME$USER$

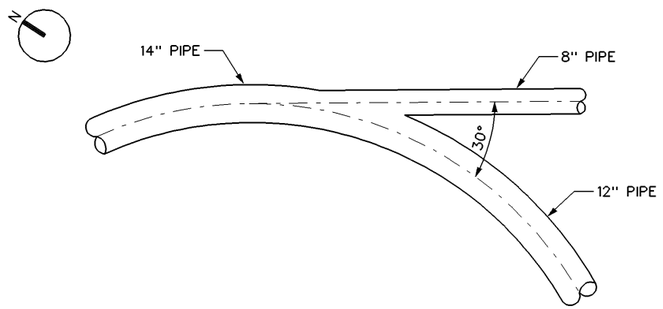

REF M-104 (1) DETAIL: PIT TAG "Y"

0' 2' 4'

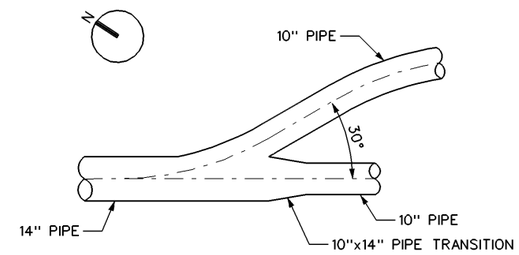

REF M-104 (2) DETAIL: CHINOOK/STEELHEAD "Y"

0' 2' 4'

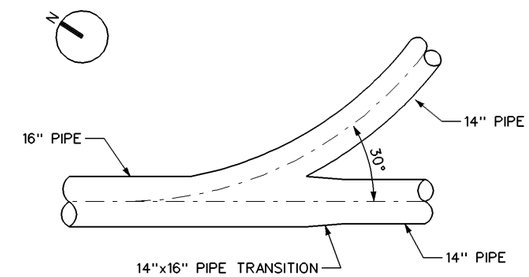

REF M-104 (4) DETAIL: CHINOOK/PIT TAG PIPE "Y"

0' 2' 4'

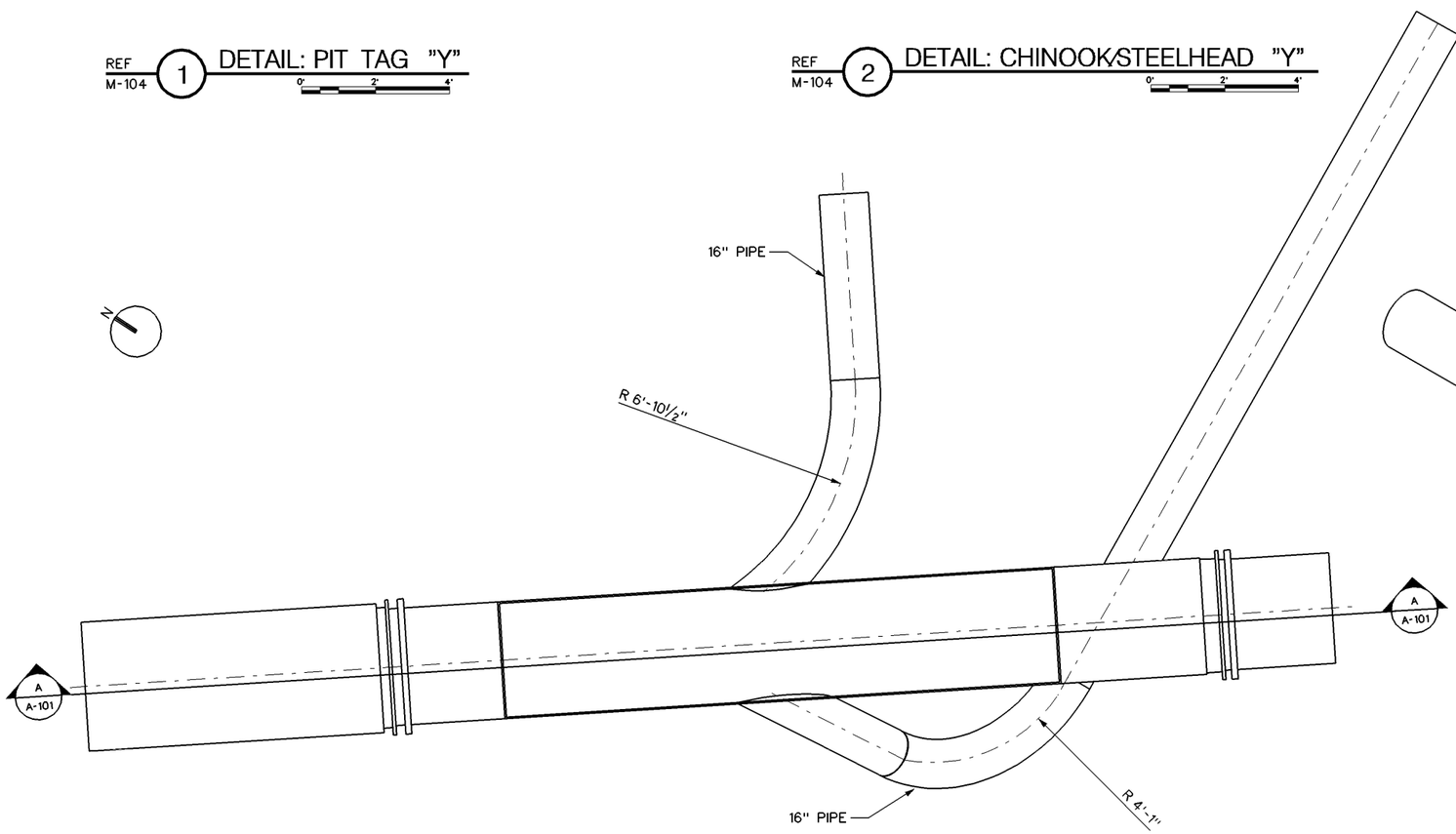

REF M-104 (3) DETAIL: PRIMARY OUTFALL "Y"

0' 2' 4'

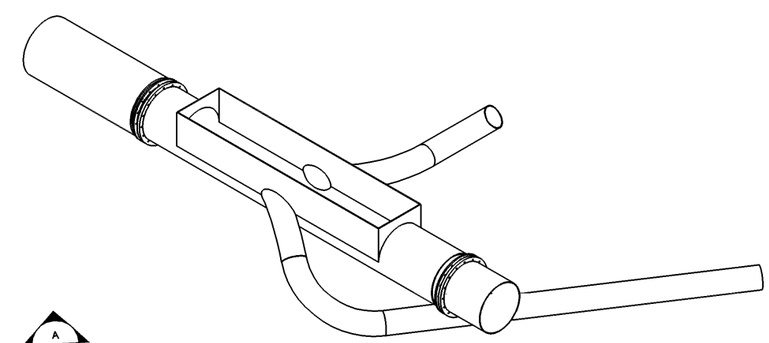

PRIMARY OUTFALL "Y" ISOMETRIC

NOT TO SCALE

US Army Corps of Engineers
Walla Walla District

Symbol	Description	Date	App.	Symbol	Description	Date	App.

60% REVIEW SET

12/20/10

U.S. ARMY ENGINEER DISTRICT
CORPS OF ENGINEERS
WALLA WALLA, WASHINGTON

DESIGNED BY: P. AUTH
DWN BY: HAUGEN
CHKED BY: CHK BY
SUBMITTED BY: DWAYNE WESTON
CHIEF DES. SEC.
DATE: DY MON YR
SOLICITATION NO. XX-B-XXXX
CONTRACT NO.
FILE NO. FILE NUMBER

MCNARY LOCK AND DAM
COLUMBIA RIVER, OREGON AND WASHINGTON
JUVENILE FISH FACILITY – OUTFALL PIPE RELOCATION – FY2010

ENLARGED PIPE DETAILS

Sheet number:
M–401

L:\MNA\CAD\MFF2\MFF2M-401---.DGN

BORDER SIZE IS ANSI D

$TIME DATE AND TIME PLOTTED:20-DEC-2010 09:37 DESIGN FILE:L:\MNA\CAD\MFF2\MFF2M-401---.DGN SCALE$SCALE$ USERNAME$USER$

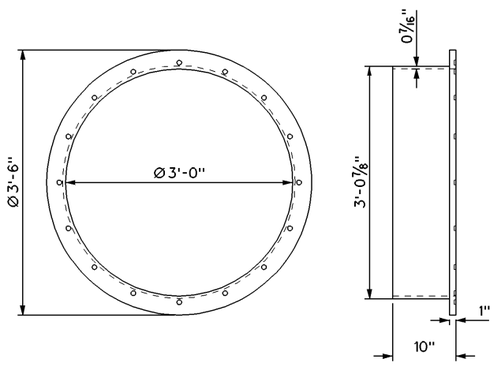

3 DETAIL: 36 INCH PUSH RING

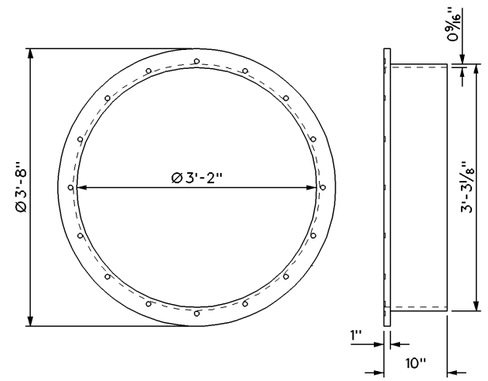

4 DETAIL: 38 INCH PUSH RING

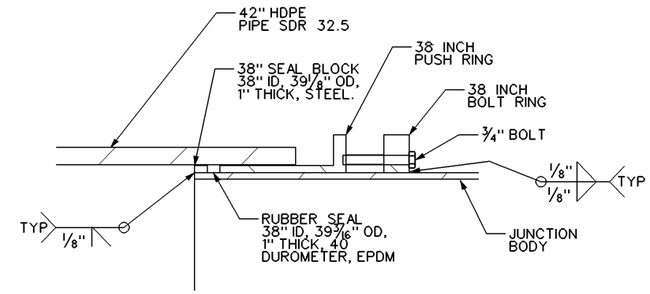

1 DETAIL

NOT TO SCALE

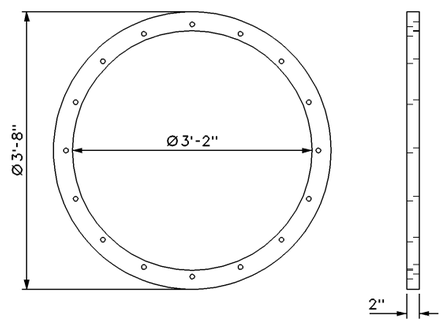

5 DETAIL: 38 INCH BOLT RING

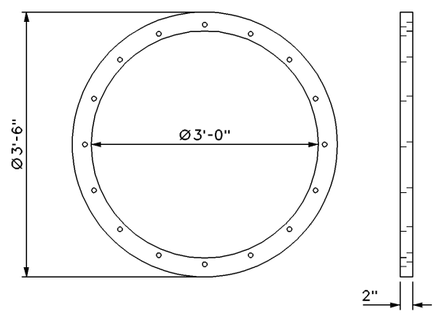

6 DETAIL: 36 INCH BOLT RING

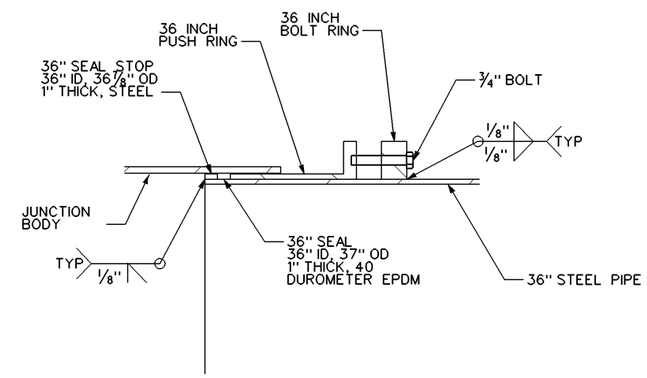

2 DETAIL

NOT TO SCALE

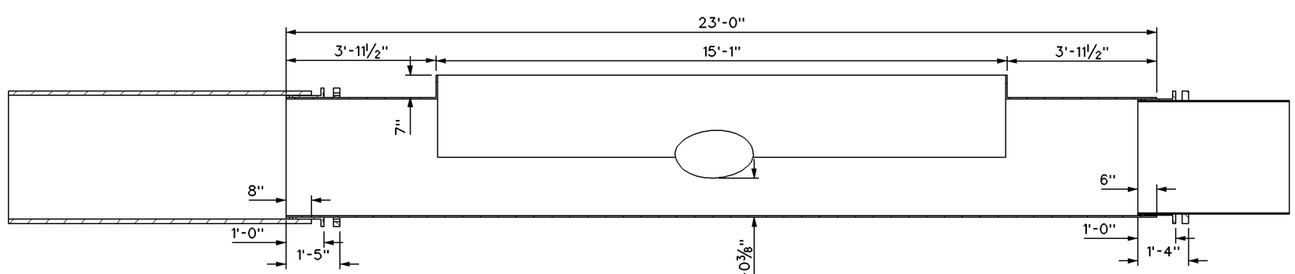

A SECTION

US Army Corps of Engineers
Walla Walla District

60% REVIEW SET
12/20/10

Symbol	Description	Date	Appr.	Symbol	Description	Date	Appr.

U.S. ARMY ENGINEER DISTRICT
CORPS OF ENGINEERS
WALLA WALLA, WASHINGTON

DESIGNED BY: DESIGNER'S NAME
DWN BY: DWN BY
CHKED BY: CHK BY
SUBMITTED BY: SUBMITTER'S NAME CHIEF DES. SEC.
DATE: DY MON YR
SOLICITATION NO. XX-B-XXXX
CONTRACT NO.
FILE NO. FILE NUMBER

MCNARY LOCK AND DAM
COLUMBIA RIVER OREGON AND WASHINGTON
JUVENILE FISH FACILITY – OUTFALL PIPE RELOCATION – FY2010
36 INCH PIPE JUNCTION DETAILS

Sheet number:
M–402

L:\MNA\CAD\MFF2\MFF2M-402---.DGN

BORDER SIZE IS ANSI D

$TIME DATE AND TIME PLOTTED:20-DEC-2010 09:37 DESIGN FILE:L:\MNA\CAD\MFF2\MFF2M-402---.DGN SCALE$SCALE$ USERNAME$USER$

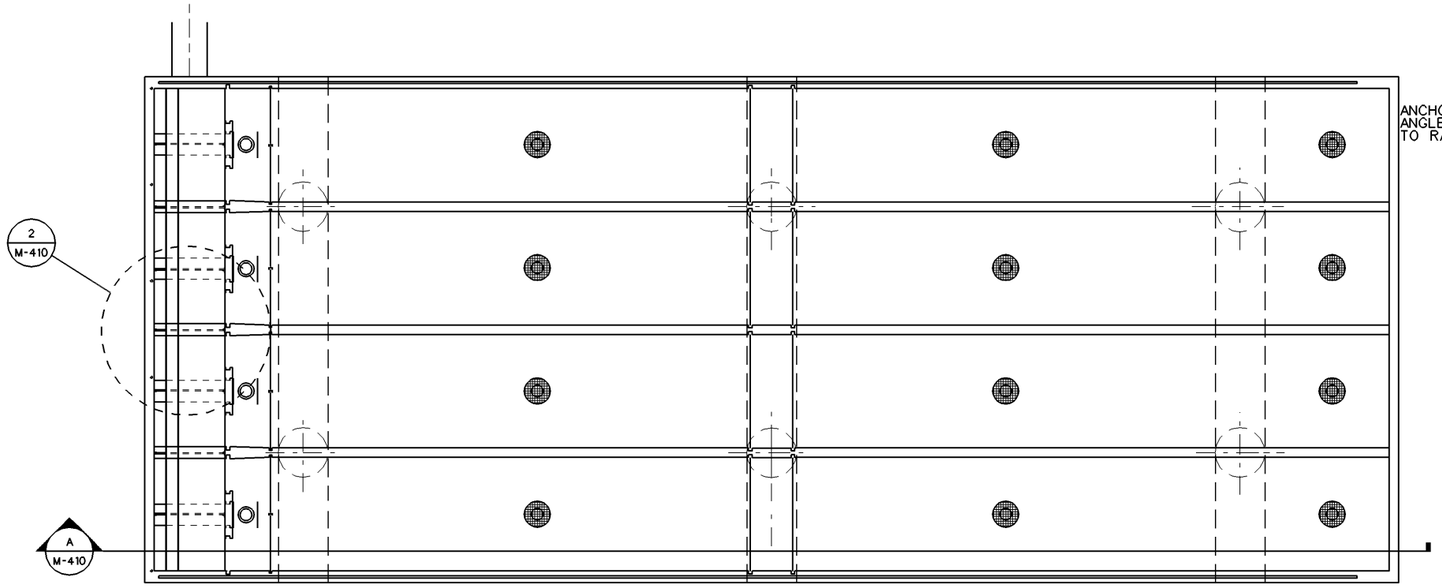

WEST RACEWAY PLAN

0' 4' 8'

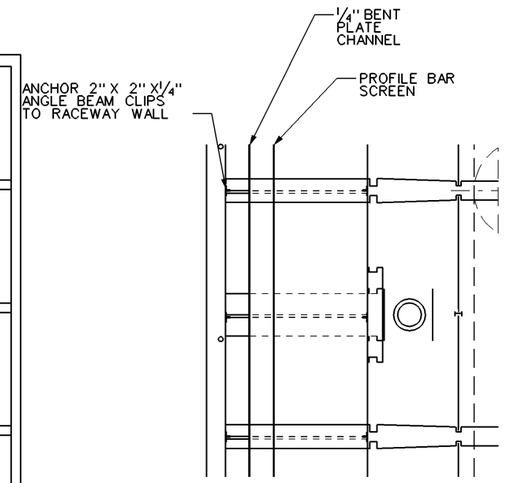

2 DETAIL

0' 2' 4'

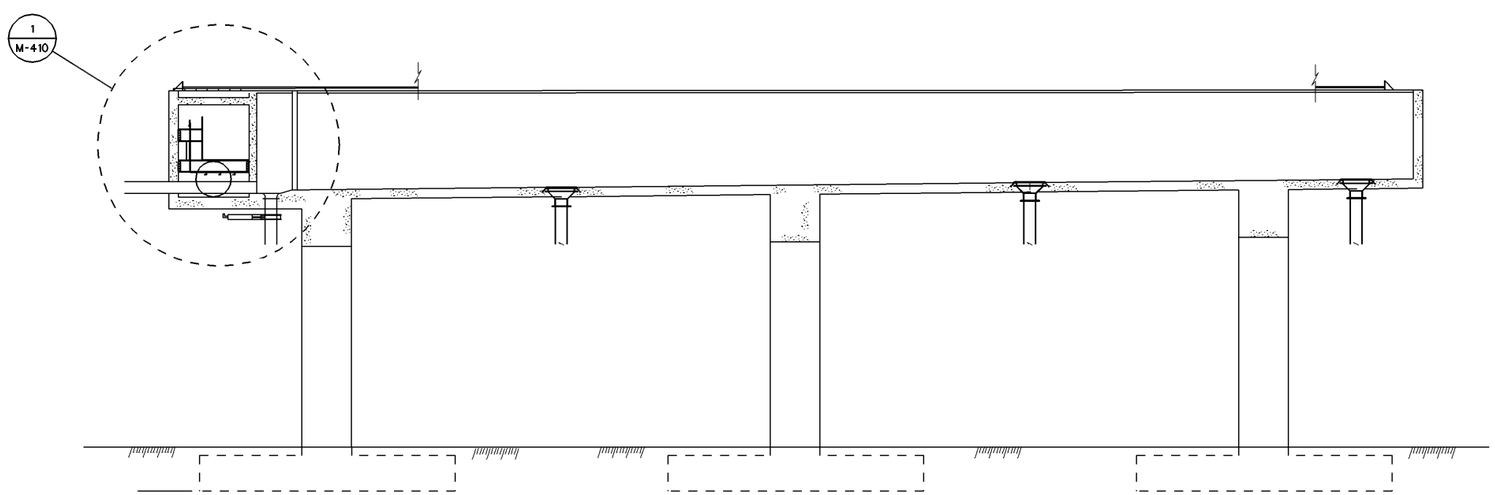

A SECTION: RACEWAY

0' 4' 8'

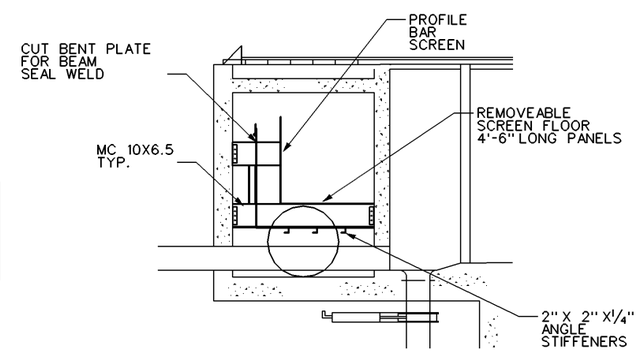

1 DETAIL

0' 2' 4'

US Army Corps of Engineers
Walla Walla District

Symbol	Description	Date	App	Symbol	Description	Date	App

60% REVIEW SET
12/20/10

DESIGNED BY: DESIGNER'S NAME
DWN BY: DWN BY
CHKED BY: CHK BY
SUBMITTED BY: SUBMITTER'S NAME
CHIEF: DES. SEC.
DATE: DY MON YR
SOLICITATION NO. XX-B-XXXX
CONTRACT NO.
FILE NO.: FILE NUMBER

U.S. ARMY ENGINEER DISTRICT
CORPS OF ENGINEERS
WALLA WALLA, WASHINGTON

MONARY LOCK AND DAM
COLUMBIA RIVER, OREGON AND WASHINGTON
JUVENILE FISH FACILITY – OUTFALL PIPE RELOCATION – FY2010

RACEWAY LAMPREY MODIFICATION PLAN

Sheet number:
M–410

L:\MNA\CAD\MFF2\MFF2M-410---.DGN

BORDER SIZE IS ANSI D

$TIME DATE AND TIME PLOTTED:20-DEC-2010 09:37 DESIGN FILE:L:\MNA\CAD\MFF2\MFF2M-410---.DGN SCALE$SCALE$ USERNAME$USER$

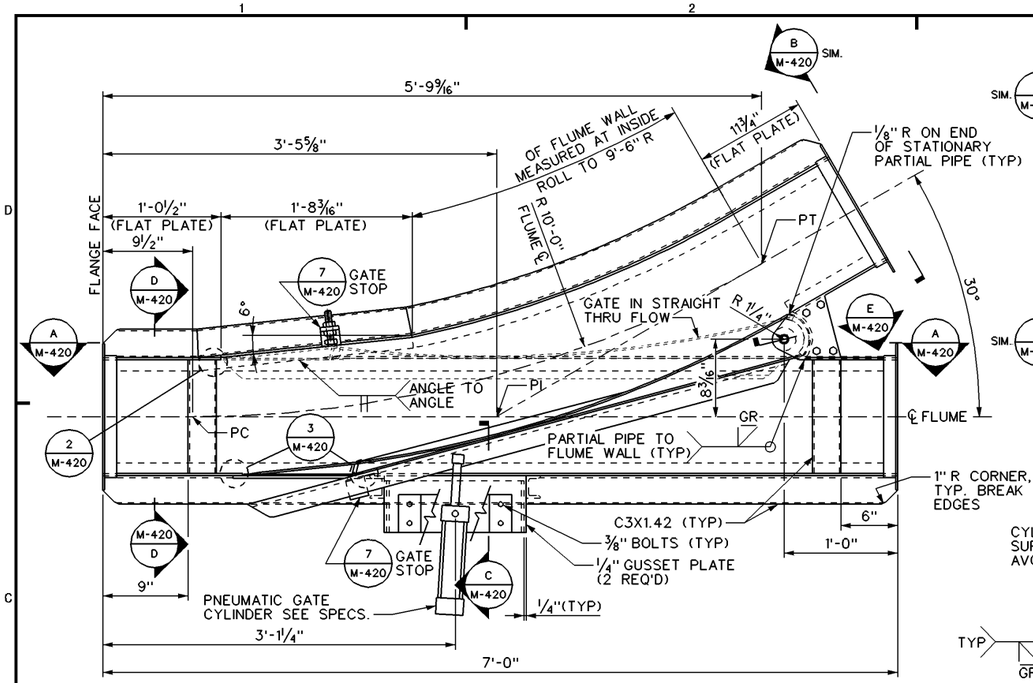

1 PLAN: SWITCH GATE
SHOWN IN DIVERTED FLOW 0" 8" 16"

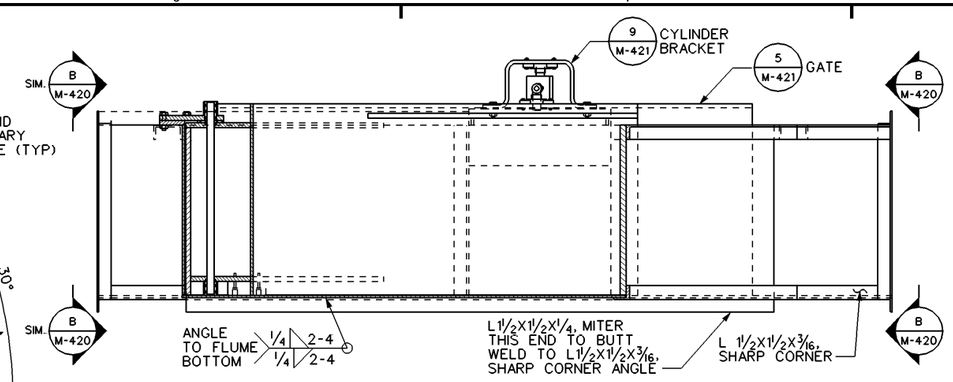

A SECTION
0" 8" 16"

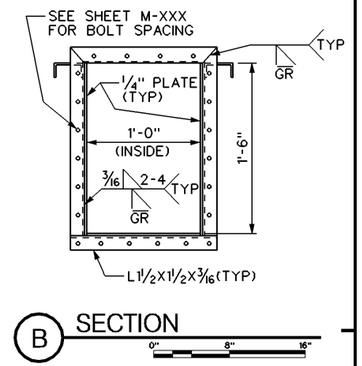

B SECTION
0" 8" 16"

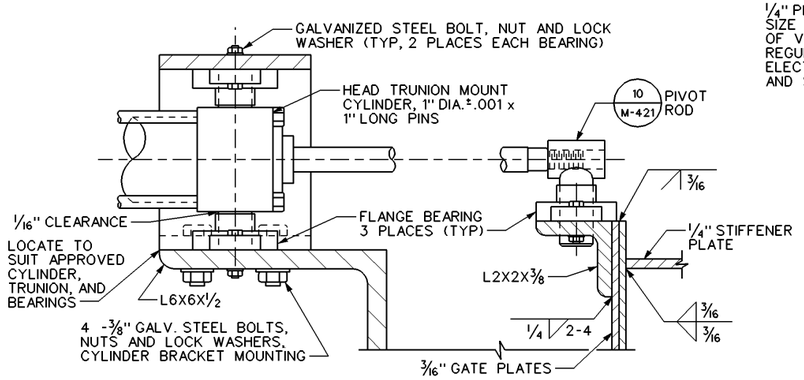

C SECTION
0" 2" 4"

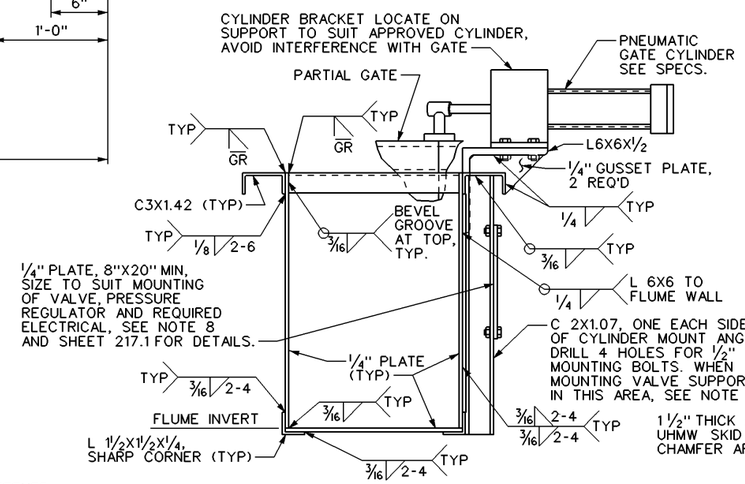

D SECTION
NOT TO SCALE

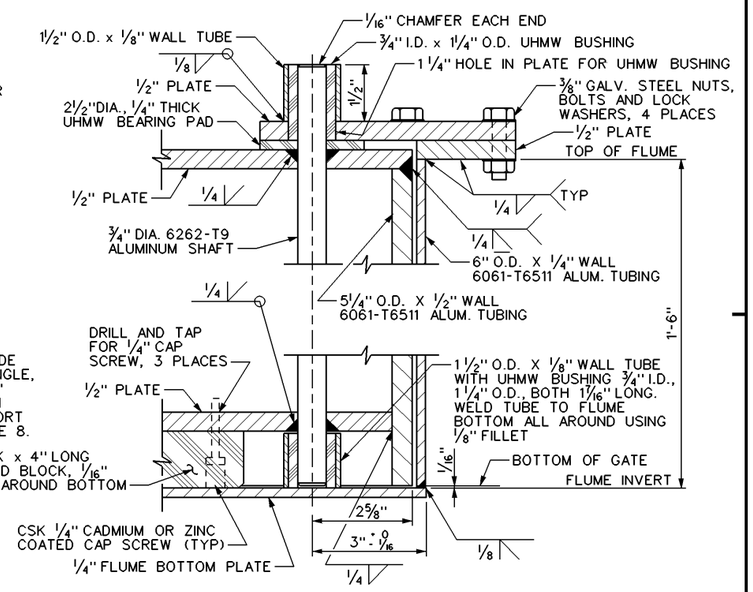

E SECTION
0" 2" 4"

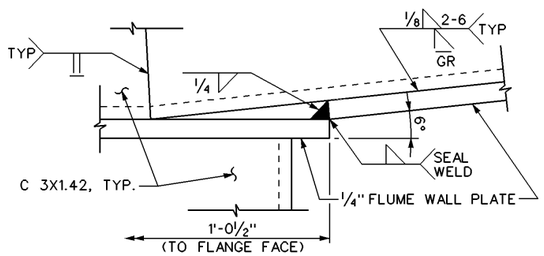

2 DETAIL
0" 1" 2"

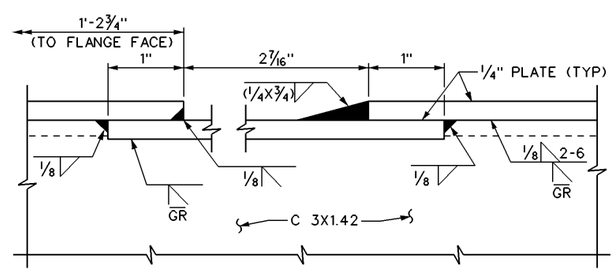

3 DETAIL
0" 1" 2"

NOTES:

1. ALL 6061-T6 WELDED ALUMINUM UNLESS OTHERWISE NOTED.
2. MAKE END CONNECTIONS USING 5/16" ZINC PLATED, OR CADMIUM PLATED CAP SCREWS, NUTS, AND WASHERS, AND A 1/4" NEOPRENE FULL FACE CONTINUOUS GASKET. SEAL ANY GASKET SPLICES USING APPROVED SILICONE SEALER.
3. CSK - COUNTERSUNK
4. FHMS - FLAT HEAD MACHINE SCREW
5. ALL FLUME INTERIOR SURFACES SHALL BE SMOOTH AND FREE OF ANY SHARP EDGES OR WELD SPLATTER WHICH MAY BE HARMFUL TO FISH.
6. UHMW - ULTRA HIGH MOLECULAR WEIGHT POLYETHYLENE.
7. A SWITCH TO THE RIGHT GATE IS SHOWN, A SWITCH TO THE LEFT GATE IS OPPOSITE HAND.
8. LOCATE THE EQUIPMENT MOUNTING PANEL ON THE SIDE OF THE SWITCH GATE HAVING PERSONNEL ACCESS (SEE SHEET 114). IF IT IS ON THE OPPOSITE SIDE SHOWN, MOUNT THE 1/4" P ON 2-2X2X3/16 ANGLES WELDED ON SIDE OF GATE FOR THE FULL HEIGHT OF THE GATE. HARD PIPE THE AIR LINES BENEATH THE GATE, SECURE NEAR CYLINDER AND CONNECT USING REQUIRED FLEX HOSE.
9. SAMPLE TANK SWITCH GATES ARE TO BE REMOTELY CONTROLLED BY A TIMER CIRCUIT, SEE ELECTRICAL SHEET 217, REMAINING GATES ARE TO BE CONTROLLED BY MANUAL AIR CONTROL VALVE MOUNTED DIRECTLY ON THE SWITCH GATE.

US Army Corps of Engineers
Walla Walla District

60% REVIEW SET
12/20/10

Symbol	Description	Date	Appr.	Symbol	Description	Date	Appr.

U.S. ARMY ENGINEER DISTRICT
CORPS OF ENGINEERS
WALLA WALLA, WASHINGTON

DESIGNED BY: P. AUTH
DWN BY: HAUGEN
CHKED BY: CHK BY
SUBMITTED BY: DWAYNE WESTON CHIEF, DES. SEC.
DATE: DY MON YR
SOLICITATION NO. XX-B-XXXX
CONTRACT NO.
FILE NO.: FILE NUMBER

MONARY LOCK AND DAM
COLUMBIA RIVER, OREGON AND WASHINGTON
JUVENILE FISH FACILITY – OUTFALL PIPE RELOCATION – FY2010
DISTRIBUTION FLUME SWITH GATE
SHEET 1

Sheet number:
M–420

L:\MNA\CAD\MFF2\MFF2M-420---.DGN

BORDER SIZE IS ANSI D

$TIME DATE AND TIME PLOTTED:20-DEC-2010 09:36 DESIGN FILE:L:\MNA\CAD\MFF2\MFF2M-420---.DGN SCALE$SCALE$ USERNAME$USER$

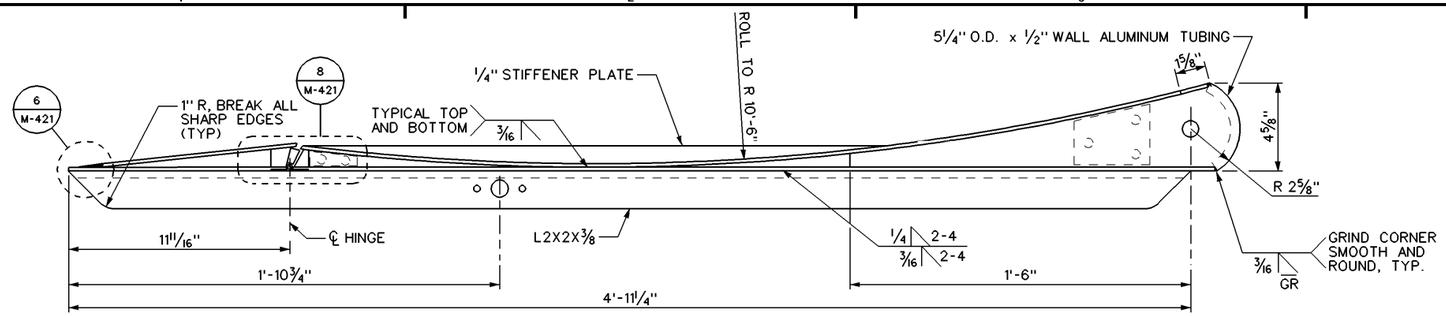

REF M-420 (4) PLAN: GATE

0" 4" 8"

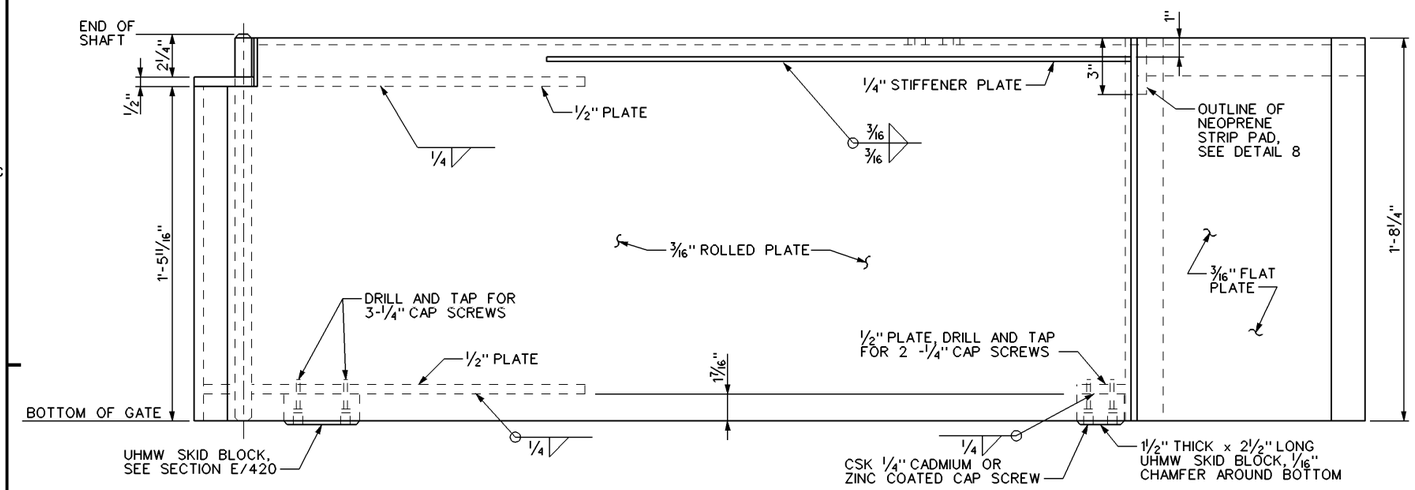

REF M-420 (5) ELEVATION: GATE

0" 4" 8"

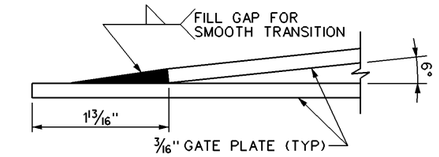

(6) DETAIL

0" 1" 2"

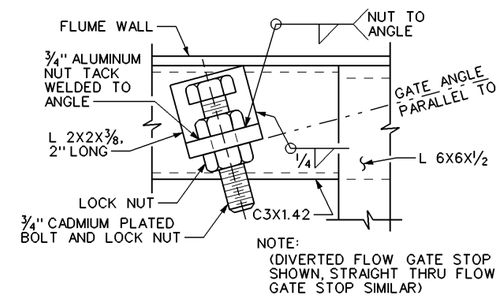

REF M-420 (7) DETAIL: GATE STOP

0" 2" 4"

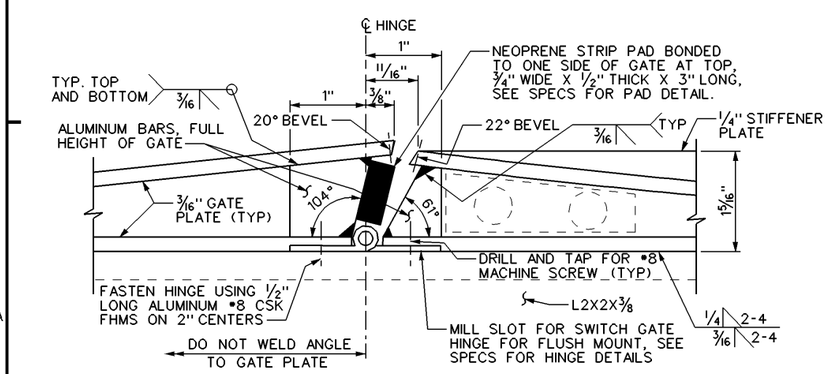

(8) DETAIL

0" 1" 2"

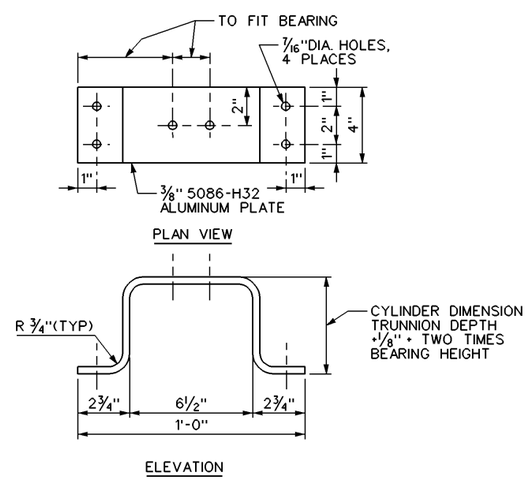

(9) DETAIL: CYLINDER BRACKET

0" 4" 8"

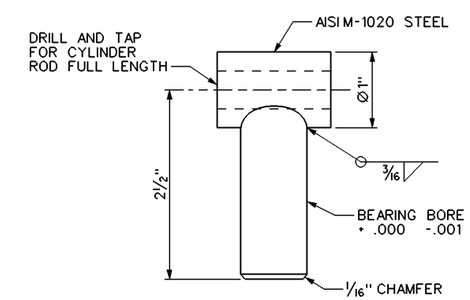

REF M-420 (10) DETAIL: PIVOT ROD

0" 1" 2"

US Army Corps of Engineers
Walla Walla District

60% REVIEW SET
12/20/10

Symbol	Description	Date	App. Symbol	Description	Date	App.

DESIGNED BY: P. AUTH
DWN BY: HAUGEN
CHKED BY:
CHK BY:
SUBMITTED BY: DWAYNE WESTON
CHIEF DES. SEC.
DATE: DY MON YR
SOLICITATION NO. XX-B-XXXX
CONTRACT NO.
FILE NO.: FILE NUMBER

U.S. ARMY ENGINEER DISTRICT
CORPS OF ENGINEERS
WALLA WALLA, WASHINGTON

MONARY LOCK AND DAM
COLUMBIA RIVER, OREGON AND WASHINGTON
JUVENILE FISH FACILITY – OUTFALL PIPE RELOCATION – FY2010
DISTRIBUTION FLUME SWITCH GATE
SHEET 2

Sheet number:
M–421

L:\MNA\CAD\MFF2\MFF2M-421---.DGN

BORDER SIZE IS ANSI D

$TIME DATE AND TIME PLOTTED:20-DEC-2010 09:36 DESIGN FILE:L:\MNA\CAD\MFF2\MFF2M-421---.DGN SCALE$SCALE$ USERNAME$USER$

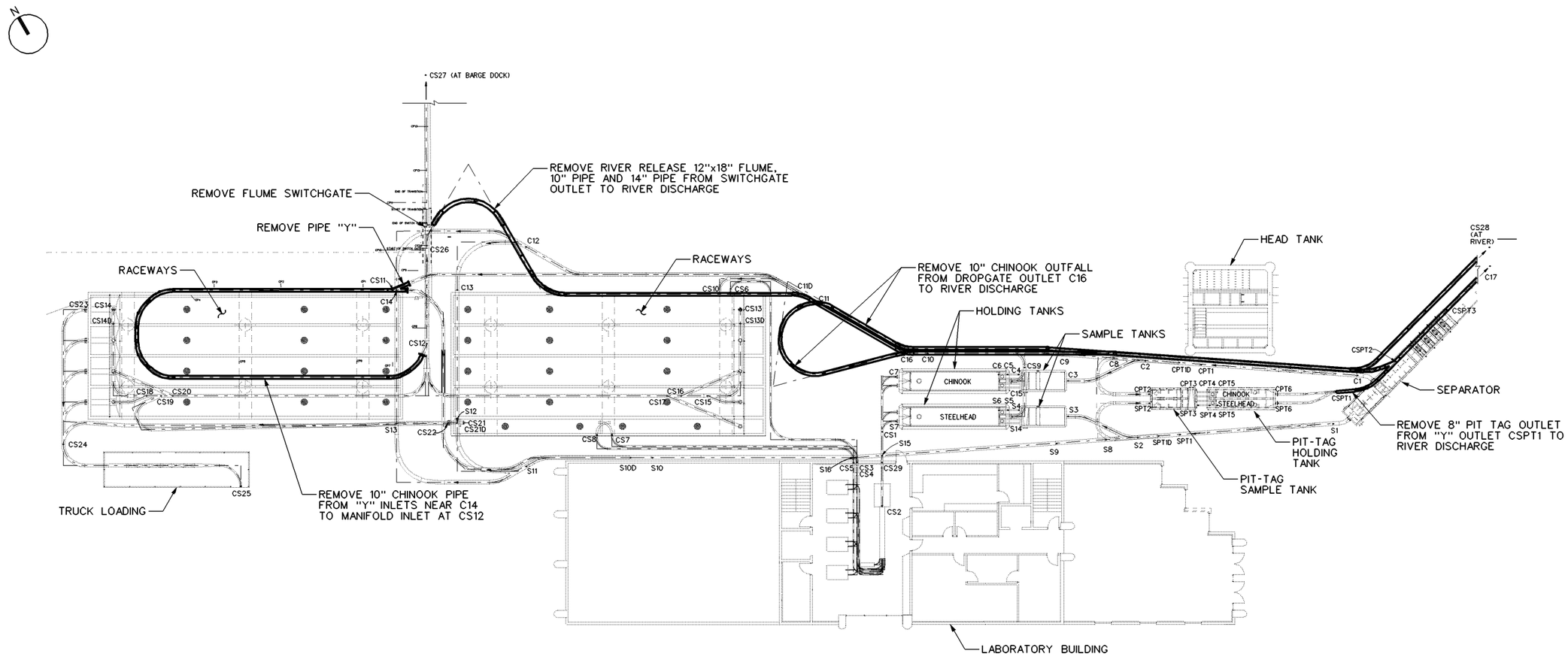

DEMOLITION PLAN: HOLDING FACILITIES FISH DISTRIBUTION

0' 16' 32'

LEGEND:

- EXISTING PIPE OR FLUME TO BE REMOVED
- EXISTING FEATURES TO REMAIN

NOTES:

1. UNLESS OTHERWISE NOTED, WHERE PIPIES ARE REMOVED ALSO REMOVE APPUTENANT PIPE HANGERS.
2. PIPE CONNECTIONS NOT REPLACED SHALL BE CAPPED.

US Army Corps of Engineers
Walla Walla District

60% REVIEW SET
12/20/10

Symbol	Description	Date	Appr.

DESIGNED BY: DESIGNER'S NAME
DWN BY: DWN BY
CHKD BY: CHK BY
SUBMITTED BY: SUBMITTER'S NAME, CHIEF
DATE: DY MON YR
SOLICITATION NO. XX-B-XXXX
CONTRACT NO.
FILE NO. FILE NUMBER

U.S. ARMY ENGINEER DISTRICT
CORPS OF ENGINEERS
WALLA WALLA, WASHINGTON

MONARY LOCK AND DAM
COLUMBIA RIVER, OREGON AND WASHINGTON
JUVENILE FISH FACILITY – OUTFALL PIPE RELOCATION – FY2010

FISH FACILITY
DEMOLITION PLAN

Sheet number:
MD–101

L:\MNA\CAD\MFF2\MFF2MD101---.DGN

BORDER SIZE IS ANSI D

$TIME DATE AND TIME PLOTTED:20-DEC-2010 09:36 DESIGN FILE:L:\MNA\CAD\MFF2\MFF2MD101---.DGN SCALE$SCALE$ USERNAME$USER$

KEYED NOTES
1. SEE DRAWING MFF2E-102. DRAWING DENOTES FEEDER ROUTING FROM SOURCE PANEL TO PREDATION SPRINKLER PUMP.
2. SEE DRAWING MFF2E-103. DRAWING DENOTES INSTALLATION OF NEW ELECTRICAL EQUIPMENT.
3. SEE DRAWING MFF2E-103. DRAWING DENOTES INSTALLATION OF NEW ELECTRICAL EQUIPMENT.

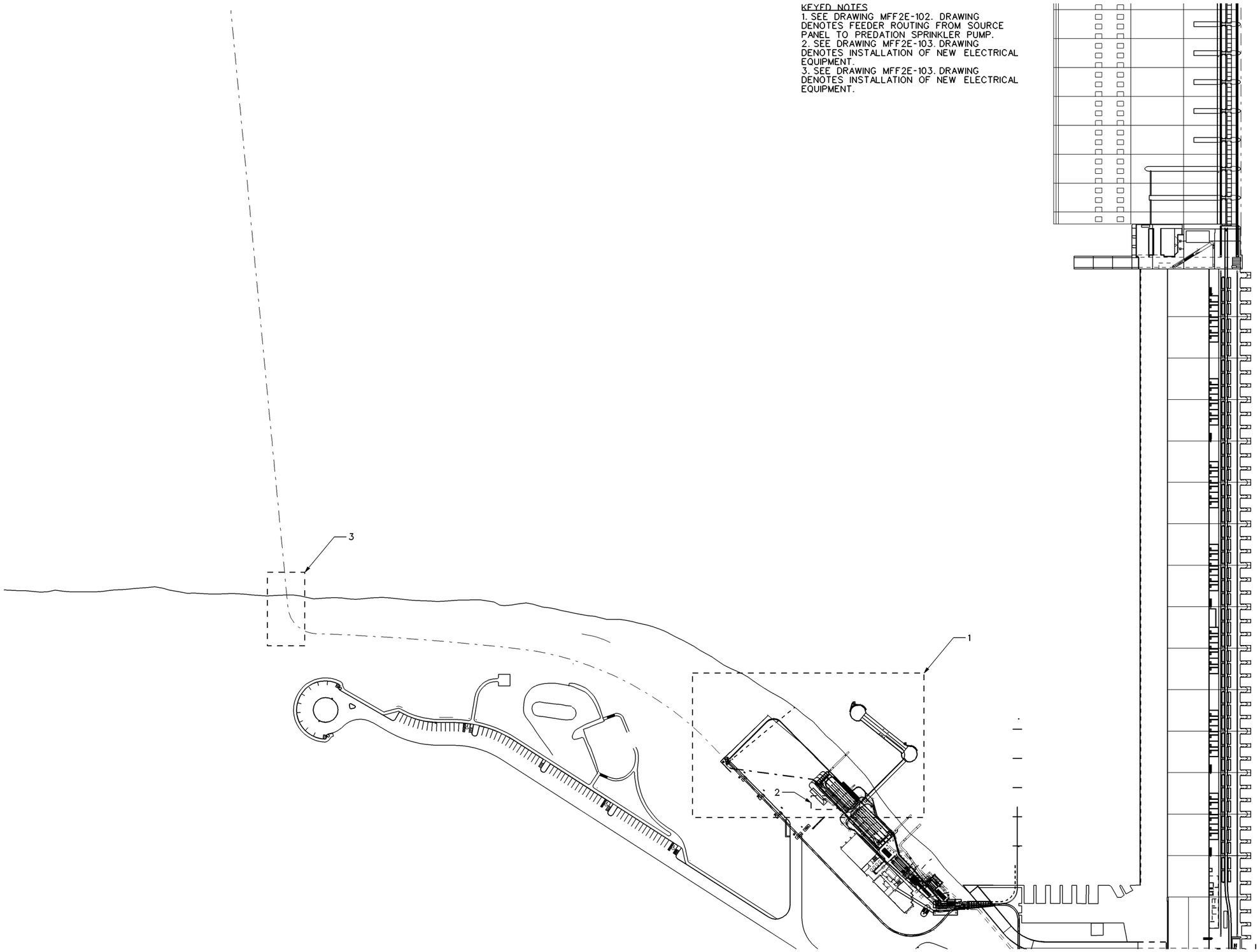

US Army Corps of Engineers
Walla Walla District

Symbol	Description	Date	Appr.	Symbol	Description	Date	Appr.

60% REVIEW SET
12/20/10

U.S. ARMY ENGINEER DISTRICT
CORPS OF ENGINEERS
WALLA WALLA, WASHINGTON

DESIGNED BY: DESIGNER'S NAME
DWN BY: DWN BY
CHKED BY: CHK BY
SUBMITTED BY: SUBMITTER'S NAME
CHIEF DES. SEC.
FILE NO. FILE NUMBER
DATE: DY MON YR
SOLICITATION NO. XX-B-XXXX
CONTRACT NO.

MCNARY LOCK AND DAM
COLUMBIA RIVER, OREGON AND WASHINGTON
JUVENILE FISH FACILITY – OUTFALL PIPE RELOCATION – FY2010
SHEET TITLE LINE 1
SHEET TITLE LINE 2
SHEET TITLE LINE 3

Sheet number:
E–101

L:\MNA\CAD\MFF2\MFF2E-101---.DGN

BORDER SIZE IS ANSI D

$TIME DATE AND TIME PLOTTED:20-DEC-2010 09:38 DESIGN FILE:L:\MNA\CAD\MFF2\MFF2E-101---.DGN SCALE$SCALE$ USERNAME$USER$

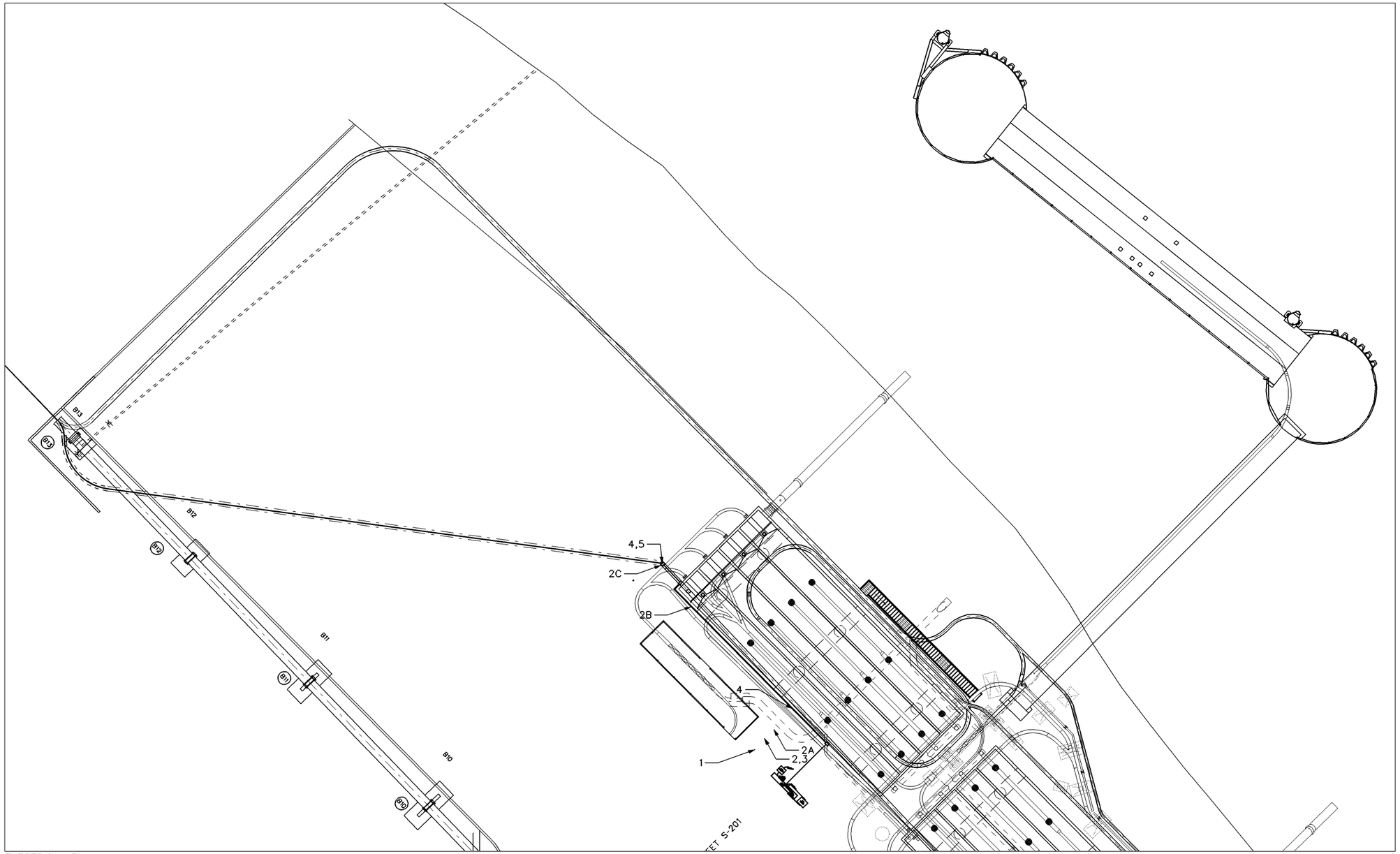

ELECTRICAL PLAN
PROPOSED
SCALE: 1/16" TO 1'

KEYED NOTES:

1. LOCATION OF PANEL JCQ4. SEE DRAWING MFF2EP-102.
2. PROVIDE CONDUIT AND WIRE FROM PANEL JCQ4 TO COMBINATION STARTER/DISCONNECT SPECIFIED ON DRAWING MFF2EP-102. CONTRACTOR SHALLPROVIDE SUPPORTS, STRUTS, HANGARS, ETC AS REQUIRED TO MAKE INSTALLATION COMPLETE PER NEC. CONTRACTOR SHALL SURVEY SITE PRIOR TO BID.
2A. BRANCH CIRCUIT SHALL BE RUN OVERHEAD ON CONTRACTOR PROVIDED SUPPORTS FROM SOURCE PANEL TO JFF STRUCTURE. CIRCUIT IS (3) •? & •?G IN 1 1/2" RIGID STEEL.

KEYED NOTES CONTINUED:

2B. BRANCH CIRCUIT SHALL BE HUNG FROM JFF STRUCTURE AND RUN AS INDICATED TO WHERE NEW LAMPREY OUTFALL PIPES LEAVES THE STRUCTURE TO THE WEST. CIRCUIT IS (3) •? & •?G IN 1 1/2" RIGID STEEL.
2C. BRANCH CIRCUIT SHALL BE HUNG FROM NEW OUTFALL PIPE AND FOLLOW PIPE TO GROUND LEVEL AND CONTINUE BELOW GROUND ALONG WITH PIPING TO LOCATION INDICATED ON DRAWING MFF2EP102.. CIRCUIT IS (3) •? & •?G IN 1 1/2" RIGID STEEL AND CHANGES TO 1 1/2" SCHEDULE 80 PVC WHERE IT ENTERS THE GROUND.

KEYED NOTES CONTINUED:

3. CONTRACTOR SHALL PROVIDE J-BOXES AND PULL BOXES AS REQUIRED BY NEC WHETHER OR NOT BOX IS SHOWN ON THE DRAWING.
4. PROVIDE EXPANSION JOINT RATED FOR WET LOCATIONS ON RIGID STEEL CONDUIT WITH MINIMUM OF 4" EXPANSION.
5. PROVIDE EXPANSION JOINT RATED FOR WET LOCATIONS ON PVC CONDUIT WITH MINIMUM OF 4" EXPANSION WHERE CONDUIT ENTERS THE GROUND.

US Army Corps of Engineers
Walla Walla District

Symbol	Description	Date	Appr.	Symbol	Description	Date	Appr.

60% REVIEW SET
12/20/10

DESIGNED BY:
DWN BY:
CHKED BY:
SUBMITTED BY:
DATE: DY MON YR
SOLICITATION NO. XX-B-XXXX
CONTRACT NO.
FILE NO.:

U.S. ARMY ENGINEER DISTRICT
CORPS OF ENGINEERS
WALLA WALLA, WASHINGTON

MONARY LOCK AND DAM
COLUMBIA RIVER, OREGON AND WASHINGTON
JUVENILE FISH FACILITY –
OUTFALL PIPE RELOCATION – FY2010

Sheet number:

L:\MNA\CAD\MFF2\MFF2E-102---.DGN

BORDER SIZE IS ANSI D

$TIME DATE AND TIME PLOTTED:20-DEC-2010 09:38 DESIGN FILE:L:\MNA\CAD\MFF2\MFF2E-102---.DGN SCALE$SCALE$ USERNAME$USER$

KEYED NOTES
1. LOCATION OF PANEL JCQ4. PROVIDE 480V, 3-POLE, ??A CIRCUIT BREAKER IN EXISTING PANEL. MAKE/MODEL AND AIC RATING SHALL MATCH EXISTING BREAKERS IN PANEL. SEE PANEL SCHEDULE THIS SHEET.
2. PROVIDE CONDUIT AND WIRE FROM PANEL JCQ4 TO COMBINATION STARTER/DISCONNECT SPECIFIED UNDER KEYED NOTE 2. CONTRACTOR SHALLPROVIDE SUPPORTS, STRUTS, HANGARS, ETC AS REQUIRED TO MAKE INSTALLATION COMPLETE PER NEC. CONTRACTOR SHALL SURVEY SITE PRIOR TO BID.
2A. BRANCH CIRCUIT SHALL BE RUN OVERHEAD ON CONTRACTOR PROVIDED SUPPORTS FROM SOURCE PANEL TO JFF STRUCTURE. CIRCUIT IS (3) #? & #?G IN 1 1/2" RIGID STEEL.
2B. BRANCH CIRCUIT SHALL BE HUNG FROM JFF STRUCTURE AND RUN TO THE NORTHWEST CORNER OF THE STRUCTURE WHERE NEW OUTFALL PIPES LEAVES THE STRUCTURE TO THE WEST. CIRCUIT IS (3) #? & #?G IN 1 1/2" RIGID STEEL.
2C. BRANCH CIRCUIT SHALL BE HUNG FROM NEW OUTFALL PIPE AND FOLLOW PIPE THROUGH THE VAULT AND UNDERGROUND AT SOUTHWEST CORNER OF PARKING AREA. CIRCUIT IS (3) #? & #?G IN 1 1/2" RIGID STEEL AND CHANGES TO 1 1/2" SCHEDULE 80 PVC WHERE IT ENTERS THE GROUND.

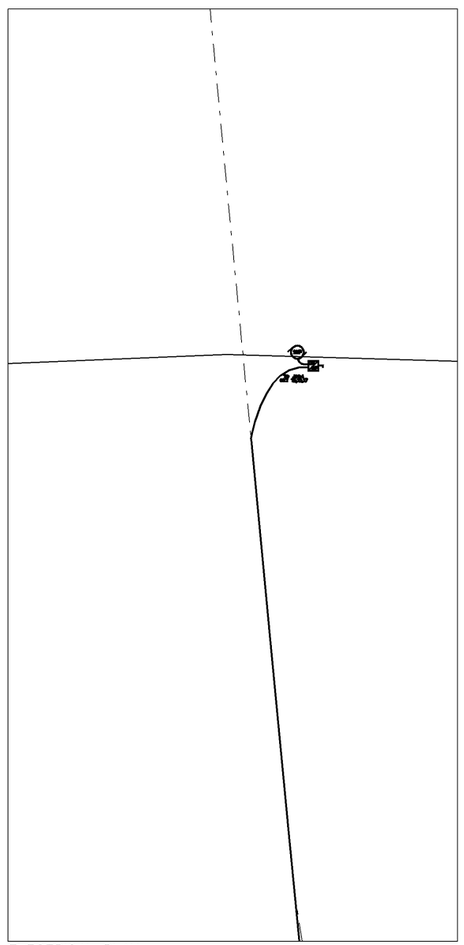

ELECTRICAL PLAN
PROPOSED
SCALE: 1/4" TO 1'

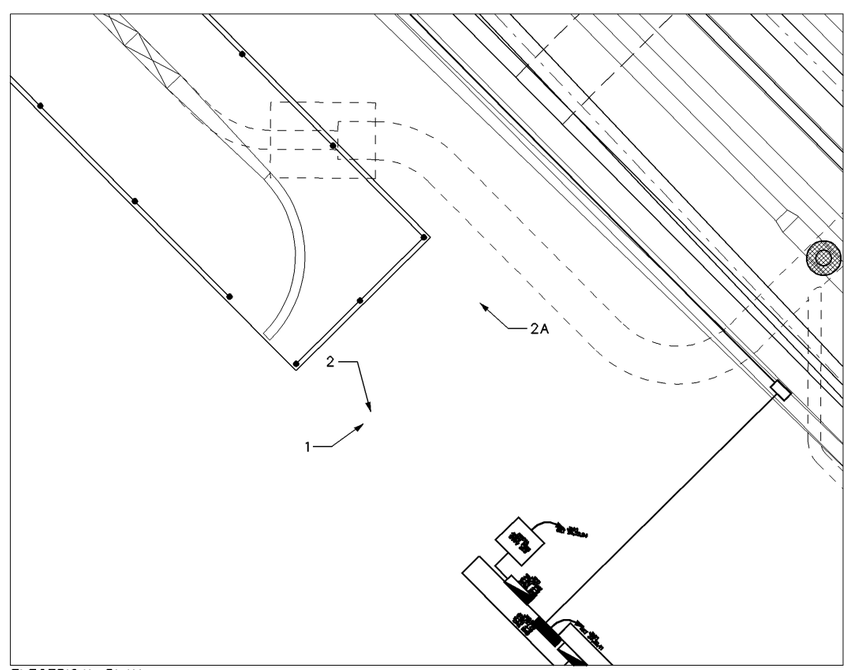

ELECTRICAL PLAN
PROPOSED
SCALE: 1/4" TO 1'

US Army Corps of Engineers
Walla Walla District

Symbol	Description	Date	App.	Symbol	Description	Date	App.

60% REVIEW SET
12/20/10

DESIGNED BY:
DATE: DY MON YR
DWN BY:
CHKED BY:
SOLICITATION NO. XX-B-XXXX
SUBMITTED BY:
CONTRACT NO.
FILE NO.:

U.S. ARMY ENGINEER DISTRICT
CORPS OF ENGINEERS
WALLA WALLA, WASHINGTON

MCNARY LOCK AND DAM
COLUMBIA RIVER OREGON AND WASHINGTON
JUVENILE FISH FACILITY –
OUTFALL PIPE RELOCATION – FY2010

Sheet number:

L:\MNA\CAD\MFF2\MFF2EP102---.DGN

BORDER SIZE IS ANSI D

$TIME DATE AND TIME PLOTTED:20-DEC-2010 09:38 DESIGN FILE:L:\MNA\CAD\MFF2\MFF2EP102---.DGN SCALE$SCALE$ USERNAME$USER$