PERMANENT JUVENILE FISH FACILITIES
VOLUME I
INDEX TO DRAWINGS

FILE NO.	SHEET NO.	
		GENERAL
MDG-1-0-15/3	1	INDEX TO DRAWINGS - VOLUME I
MDG-1-0-15/4	1.1	INDEX TO DRAWINGS - VOLUME II
MDG-1-0-15/6	1.2	INDEX TO DRAWINGS - VOLUME III
MDG-1-0-15/5	2	LOCATION MAP - SURVEY CONTROL - BORROW AREAS & EXPLORATION
		CIVIL
MDF-1-0-1/5	3	GENERAL SITE PLAN
MDF-1-9-9/1	4	RESERVED
MDF-1-9-9/2	5	LOGS OF EXPLORATIONS
MDF-1-9-9/3	6	RESERVED
MDF-1-9-9/4	7	RESERVED
		STRUCTURAL
MDF-1-5-9/28	8	GENERAL STRUCTURAL - NOTES AND DETAILS
MDF-1-5-9/29	9	GUARDRAIL DETAILS
MDF-1-5-9/30	10	RESERVED
		MECHANICAL
MDF-1-3-9/14	11	MECHANICAL KEY PLAN
MDF-1-3-9/15	12	DOMESTIC WATER, FIRE PROTECTION AND AIR SUPPLIES I
MDF-1-3-9/16	13	DOMESTIC WATER, FIRE PROTECTION AND AIR SUPPLIES II
MDF 1 3 9/14416.1	13.1	DOMESTIC WATER, FIRE PROTECTION AND AIR SUPPLIES III
MDF 1 3 9/17	14	IRRIGATION - KEY PLAN AND MISC. DETAILS
MDF-1-3-9/18	15	IRRIGATION - PLAN A
MDF-1-3-9/19	16	IRRIGATION - PLAN B
MDF-1-3-9/20	16.1	IRRIGATION - SHRUB BED DETAILS
		ELECTRICAL
MDF-1-6-9/6	17	SYMBOL LEGEND AND ABBREVIATIONS
MDF-1-6-9/7	18	LIGHTING FIXTURE SCHEDULE
MDF-1-6-9/8	19	ONE LINE DIAGRAM
MDF-1-6-9/9	19.1	ONE LINE DIAGRAM - SECONDARY PANEL BOARDS
MDF-1-6-9/10	19.2	PANEL SCHEDULES I
MDF-1-6-9/70	19.3	PANEL SCHEDULES II
MDF-1-6-9/11	20	KEY PLAN - ELECTRICAL
MDF-1-6-9/12	21	GENERAL ELECTRICAL - MEDIUM VOLTAGE POWER FEED
MDF-1-6-9/13	21.1	GENERAL ELECTRICAL - MEDIUM VOLTAGE FEEDER - DETAILS
MDP-1.33-6-1A40/1	22	MEDIUM VOLTAGE FEEDER - TRAY LAYOUT
MDP-1.33-6-1A53/1	23	MEDIUM VOLTAGE FEEDER - CONTROL CABLE LAYOUT NO. 1
MDP-1.33-6-1A53/2	24	MEDIUM VOLTAGE FEEDER - CONTROL CABLE LAYOUT NO.2
MDP-1.33-6-1A53/3	24.1	MEDIUM VOLTAGE FEEDER - CABLE TRAY DETAILS
MDP-1.33-6-1A21/1	25	MEDIUM VOLTAGE FEEDER - ONELINE DRAWING
MDP-1.33-6-1A6/1	26	MEDIUM VOLTAGE FEEDER - XJ03 LOCATION, LEVEL 287
MDP-1.33-6-9A24/1	27	MEDIUM VOLTAGE FEEDER - XJ03 CNTL AND LINE RELAYING
MDP-1.33-6-9A4/1	28	SWITCHBOARD S11, S15, S1R6 - FACE LAYOUT
MDP-1.33-6-9A4/2	28.1	MEDIUM VOLTAGE FEEDER - SWITCHBOARD S11, S12 WIRING
MDP-1.33-6-9A4/3	28.2	MEDIUM VOLTAGE FEEDER - SWITCHBOARD S14, S1R4 WIRING
MDP-1.33-6-9A4/4	28.3	MEDIUM VOLTAGE FEEDER - SWITCHBOARD S15, S1R5 WIRING
MDP-1.33-6-9A4/5	28.4	MEDIUM VOLTAGE FEEDER - SWITCHBOARD S16, S1R6 WIRING
MDP-1.33-6-9A4/6	29	MEDIUM VOLTAGE FEEDER - SWITCHBOARD SC7, SC8 WIRING
MDP-1.33-6-0A70/1	30	NOTES AND LEGEND
		SITEWORK
		CIVIL
MDF-1-9-9/5	31	GENERAL SITE PLAN & DEMOLITION
MDF-1-9-9/6	32	FISH FACILITIES ACCESS ROAD & COMPOUND - PLAN VIEW & SECTIONS
MDF-1-9-9/7	33	VISITOR PARKING AREA AND SPILLWAY PARK ROAD - PLAN VIEW & SECTIONS
MDF-1-9-9/8	34	SPILLWAY PARK ROAD - PLAN VIEW & SECTIONS
MDF-1-9-9/9	34.1	SPILLWAY PARK ROAD - PLAN VIEW & SECTIONS
MDF-1-9-9/10	34.2	SIDEWALK & ROADWAY DETAILS
MDF-1-9-9/16	34.3	SIDEWALKS TO COMFORT STATIONS - PLAN, PROFILE AND SECTIONS
MDF-1-9-9/11	35	CIVIL - SECTIONS AND DETAILS
MDF-1-9-9/12	36	VISITOR PARKING AREA & COMPOUND - CROSS SECTIONS
MDF-1-9-9/13	37	SEPTIC SYSTEM - DRAINFIELD AND DETAILS
MDF-1-9-9/14	38	SEPTIC SYSTEM - SEPTIC TANK AND DETAILS
MDF-1-9-9/15	38.1	SEPTIC SYSTEM - SEPTIC TANK REINFORCEMENT
		LANDSCAPE ARCHITECTURE
MDF-1-2-9/1	39	LANDSCAPE PLAN I - WEST SECTION
MDF-1-2-9/2	40	LANDSCAPE PLAN II - CENTER SECTION
MDF-1-2-9/3	41	LANDSCAPE PLAN III - EAST SECTION
MDF-1-2-9/4	42	LANDSCAPE - DETAILS, ENLARGED PLANS AND SCHEDULES
MDF-1-2-9/5	43	RESERVED
MDF-1-2-9/6	44	RESERVED
		ELECTRICAL
MDF-1-6-9/14	45	SITE WORK - ELECTRICAL
MDF-1-6-9/15	46	GROUNDING - SITE PLAN
MDF-1-6-9/16	46.1	GROUNDING - DETAILS
MDF-1-6-9/17	47	AREA LIGHTING I
MDF-1-6-9/18	48	AREA LIGHTING II
MDF-1-6-9/81	48.1	AREA LIGHTING DETAILS
MDF-1-6-9/82	48.2	VISITORS PLATFORM LIGHTING
MDF-1-6-9/86	48.3	SITEWORK - ELECTRICAL RECEPTACLES AND STEP LIGHTS - PERSONNEL ACCESS
MDF-1-6-9/87	48.4	SITEWORK - ELECTRICAL STEP LIGHT/RECEPTACLE DETAILS
MDF-1-6-9/19	49	ELECTRICAL DETAILS I
MDF-1-6-9/20	50	ELECTRICAL DETAILS II
MDF-1-6-9/90	50.1	HEAT TAPE SYSTEM - PLAN AND DETAILS
MDF-1-6-9/21	51	SEPTIC SYSTEM - PLAN
MDF-1-6-9/22	52	SEPTIC SYSTEM - WIRING DIAGRAMS
MDF-1-6-9/91	52.1	IRRIGATION - ELECTRIC VALVE CONTROL WIRE - ROUTING AND DETAILS
		COLLECTION CHANNEL AND DEWATERING
		STRUCTURAL
MDF-1-5-9/31	53	COLLECTION CHANNEL AND DEWATERING - PLAN
MDF-1-5-9/32	54	COLLECTION CHANNEL - PLANS
MDF-1-5-9/33	55	COLLECTION CHANNEL - SECTIONS AND DETAILS I
MDF-1-5-9/34	56	COLLECTION CHANNEL - SECTIONS AND DETAILS II
MDF-1-5-9/35	57	COLLECTION CHANNEL - SECTIONS AND DETAILS III
MDF-1-5-9/36	58	COLLECTION CHANNEL - SECTIONS AND DETAILS IV
MDF-1-5-9/37	59	SIDE DEWATERING - PLAN AND SECTION
MDF-1-5-9/38	60	SIDE DEWATERING - SECTIONS AND DETAILS I
MDF-1-5-9/39	61	SIDE DEWATERING - SECTIONS AND DETAILS II
MDF-1-5-9/40	62	SIDE DEWATERING - SECTIONS AND DETAILS III
MDF-1-5-9/41	63	SIDE DEWATERING - SECTIONS AND DETAILS IV
MDF-1-5-9/42	64	FLOOR DEWATERING - PLAN AND SECTION
MDF-1-5-9/43	65	FLOOR DEWATERING - SECTIONS AND DETAILS I
MDF-1-5-9/44	65.1	FLOOR DEWATERING - SECTIONS AND DETAILS II
MDF-1-5-9/45	66	FLOOR DEWATERING - SECTIONS AND DETAILS III
MDF-1-5-9/46	67	FLOOR DEWATERING - SECTIONS AND DETAILS IV
MDF-1-5-9/47	68	FLOOR DEWATERING - DEWATERING PIPE
MDF-1-5-9/48	68.1	FLOOR DEWATERING - SLAB REINFORCEMENT
MDF-1-5-9/49	69	ACCESS STAIRS AND PLATFORMS - PLAN, ELEVATION & SECTIONS
MDF-1-5-9/50	70	ACCESS STAIRS AND PLATFORMS - SECTIONS & DETAILS
MDF-1-5-9/51	71	EMERGENCY BYPASS WALL - PLAN, ELEVATION AND SECTIONS
MDF-1-5-9/52	72	ADULT FISH ATTRACTION WATER - PLAN AND SECTION
MDF-1-5-9/188	72.1	ADULT FISH ATTRACTION WATER - SECTIONS AND DETAILS
MDF-1-5-9/189	72.2	ADULT FISH ATTRACTION WATER - PLAN, SECTIONS & DETAILS
MDF-1-5-9/190	72.3	ADULT FISH ATTRACTION WATER - SOUTH NON-OVERFLOW FISH SCREEN
		MECHANICAL
MDF-1-3-9/21	73	OVERHEAD CRANE - PLAN AND SECTIONS
MDF-1-3-9/22	74	OVERHEAD CRANE RAIL DETAILS
MDF-1-3-9/142	74.1	DELETED
MDF-1-3-9/23	75	SCREEN CLEANERS - GENERAL LAYOUT
MDF-1-3-9/24	76	SIDE DEWATERING SCREEN CLEANER - ELEVATIONS
MDF-1-3-9/25	77	SIDE DEWATERING SCREEN CLEANER - TRUCK DETAILS
MDF-1-3-9/26	78	SIDE DEWATERING SCREEN CLEANER - STRUT AND BRUSH DETAILS
MDF-1-3-9/27	79	SIDE DEWATERING SCREEN CLEANER - RUNWAY BEAM DETAILS
MDF-1-3-9/28	80	SIDE DEWATERING SCREEN CLEANER - REMOVAL/INSTALLATION PROCEDURE
MDF-1-3-9/29	81	RECTANGULAR AREA FLOOR SCREEN CLEANER - PLAN AND ELEVATION
MDF-1-3-9/30	82	RECTANGULAR AREA FLOOR SCREEN CLEANER - SECTIONS AND DETAILS
~~MDF-1-3-9/154~~	~~82.1~~	~~RECTANGULAR AREA FLOOR SCREEN CLEANER - BRIDGE END TRUCK MODIFICATIONS~~
MDF-1-3-9/31	83	RECTANGULAR AREA FLOOR SCREEN CLEANER - BRIDGE DETAILS
MDF-1-3-9/32	84	RECTANGULAR AREA FLOOR SCREEN CLEANER - PIVOT ARMS AND BRUSH BAR DETAILS
MDF-1-3-9/33	85	TRANSITION AREA FLOOR SCREEN CLEANER - PLAN AND ELEVATION
MDF-1-3-9/34	86	TRANSITION AREA FLOOR SCREEN CLEANER - TRUCK DETAILS
MDF-1-3-9/35	87	TRANSITION AREA FLOOR SCREEN CLEANER - RUNWAY SWITCH BEAM DETAILS
~~MDF-1-3-9/155~~	~~87.1~~	~~TRANSITION AREA FLOOR SCREEN CLEANER - RUNWAY SWITCH BEAM MODIFICATIONS~~
MDF-1-3-9/36	88	TRANSITION AREA FLOOR SCREEN CLEANER - BRUSH BAR DETAILS
MDF-1-3-9/37	89	FISH COLLECTION ORIFICE FLUME DETAILS
MDF-1-3-9/49	89.1	PRIMARY DEWATERING - COMPRESSED AIR DRYER INSTALLATION
MDF-1-3-9/38	90	SIDE DEWATERING SCREENS AND ACCESS DOOR DETAILS
MDF-1-3-9/39	91	FLOOR SCREEN DETAILS
MDF-1-3-9/40	92	SIDE DEWATERING - PLAN AND SECTION
MDF-1-3-9/41	93	SECONDARY DEWATERING - PLAN AND SECTIONS
MDF-1-3-9/42	94	SECONDARY DEWATERING - SECTIONS AND DETAILS
MDF-1-3-9/145	94.1	FLUME ISOLATION GATE - PLAN, ELEVATION, SECTIONS & DETAILS
MDF-1-3-9/146	94.2	FLUME ISOLATION GATE - PLAN, SECTIONS AND DETAILS
MDF-1-3-9/43	95	FACILITY SUPPLY PIPE AND COLLECTION DEWATERING - PROFILE, SECTIONS AND DETAILS
MDF-1-3-9/44	95.1	FACILITY SUPPLY PIPE AND COLLECTION DEWATERING - THRUST RESTRAINT AND BEAM CONNECTIONS
MDF-1-3-9/45	95.2	FACILITY SUPPLY PIPE AND COLLECTION DEWATERING - TYPE I SUPPORT SADDLES
MDF-1-3-9/46	95.3	FACILITY SUPPLY PIPE AND COLLECTION DEWATERING - TYPE II SUPPORT SADDLES
MDF-1-3-9/47	95.4	FACILITY SUPPLY PIPE AND COLLECTION DEWATERING - MISCELLANEOUS DETAILS
MDF-1-3-9/48	95.5	FACILITY SUPPLY PIPE AND COLLECTION DEWATERING - TYPICAL SUPPORT SPACING AND NOTES
		ELECTRICAL
MDF-1-6-9/23	96	FISH ATTRACTION LIGHTING
MDF-1-6-9/88	96.1	ACCESS STAIRS AND PLATFORM LIGHTING
MDF-1-6-9/89	96.2	ACCESS STAIRS AND PLATFORM LIGHTING DETAILS
MDF-1-6-9/24	97	OVERHEAD CRANE - PLAN & SECTIONS
MDF-1-6-9/25	97.1	OVERHEAD CRANE - CONTROL SCHEMATICS WIRING DIAGRAMS
MDF-1-6-9/26	98	SIDE DEWATERING SCREEN CLEANER
MDF-1-6-9/71	98.1	ELECTRICAL RECTANGULAR DEWATERING SCREEN CLEANER
MDF-1-6-9/72	98.2	ELECTRICAL TRANSITION AREA SCREEN CLEANER
MDF-1-6-9/27	99	ELECTRICAL DEWATERING INTERCONNECT - DIAGRAM I
MDF-1-6-9/73	99.1	ELECTRICAL DEWATERING INTERCONNECT - DIAGRAM II
MDF-1-6-9/28	100	PLC CONTROL PANEL - DETAIL
MDF-1-6-9/32	101	SCREEN CLEANER CONTROLS I
MDF-1-6-9/33	101.1	SCREEN CLEANER CONTROLS II
MDF-1-6-9/34	101.2	SCREEN CLEANER CONTROLS III
MDF-1-6-9/74	101.3	SCREEN CLEANER CONTROLS IV
MDF-1-6-9/75	101.4	SCREEN CLEANER CONTROLS V
MDF-1-6-9/35	102	DETAILS I
MDF-1-6-9/36	102.1	DETAILS II
MDF-1-6-9/37	102.2	POWER HOUSE CABLE ROUTING
MDF-1-6-9/76	102.3	SLUICE GATE ACTUATORS
		TRANSPORTATION PIPELINE AND FLUME
		STRUCTURAL
MDF-1-5-9/53	103	TRANSPORTATION PIPELINE AND FLUME
MDF-1-5-9/54	104	ASSEMBLY BAY PIPELINE - 36" - PLAN AND SECTIONS - SH 1
MDF-1-5-9/55	104.1	ASSEMBLY BAY PIPELINE - 36" - PLAN AND SECTIONS - SH 2
MDF-1-5-9/56	104.2	ASSEMBLY BAY PIPELINE - 36" - PLAN AND SECTIONS - SH 3
MDF-1-5-9/57	104.3	ASSEMBLY BAY PIPELINE - 36" - PLAN AND SECTIONS - SH 4
MDF-1-5-9/58	104.4	ASSEMBLY BAY PIPELINE - 36" - PLAN AND SECTIONS - SH 5
MDF-1-5-9/59	105	ICE & TRASH AREA PIPELINE - 36" - PLAN AND SECTIONS - SH 1
MDF-1-5-9/60	105.1	ICE & TRASH AREA PIPELINE - 36" - PLAN AND SECTIONS - SH 2
MDF-1-5-9/61	106	PUMPHOUSE AREA - PIPELINE - 36" & 30" - PLAN & SECTIONS - SH 1
MDF-1-5-9/62	106.1	PUMPHOUSE AREA - PIPELINE - 36" & 30" - PLAN & SECTIONS - SH 2
MDF-1-5-9/63	106.2	PUMPHOUSE AREA - PIPELINE - 36" & 30" - PLAN & SECTIONS - SH 3
MDF-1-5-9/64	106.3	PUMPHOUSE AREA - PIPELINE - 36" & 30" - PLAN & SECTIONS - SH 4
MDF-1-5-9/65	106.4	PUMPHOUSE AREA - PIPELINE - 36" & 30" - PLAN & SECTIONS - SH 5
MDF-1-5-9/66	106.5	PUMPHOUSE AREA - PIPELINE - 36" & 30" - PLAN & SECTIONS - SH 6
MDF-1-5-9/67	106.6	PUMPHOUSE AREA - PIPELINE - 36" & 30" - PLAN & SECTIONS - SH 7
MDF-1-5-9/68	106.7	PUMPHOUSE AREA - PIPELINE - 36" & 30" - PLAN & SECTIONS - SH 8
MDF-1-5-9/69	107	CMP FLUME - PLAN & SECTIONS - SH 1
MDF-1-5-9/70	107.1	CMP FLUME - PLAN & SECTIONS - SH 2
MDF-1-5-9/179	107.2	CMP FLUME - PLAN & SECTIONS - SH 3
MDF-1-5-9/180	107.3	CMP FLUME - PLAN & SECTIONS - SH 4
MDF-1-5-9/181	107.4	CMP FLUME - PLAN & SECTIONS - SH 5
MDF-1-5-9/182	107.5	CMP FLUME - PLAN & SECTIONS - SH 6
MDF-1-5-9/183	108	30" PIPELINE TO RIVER - PLAN & SECTION - SH 1
MDF-1-5-9/184	109	RIVER RELEASE PIPELINE - PLAN & SECTION - SH 1
MDF-1-5-9/185	109.1	RIVER RELEASE PIPELINE - PLAN & SECTION - SH 2
MDF-1-5-9/186	110	ASSEMBLY BAY - DUCT MODIFICATIONS
		WORK DONE BY MCNARY PROJECT NOT PART OF CONTRACT
MDF-9-6-9/3	100.1	ALARM SYSTEM DETAILS
MDF-9-6-9/4	100.2	POWERHOUSE CABLE ROUTING I
MDF-9-6-9/5	100.3	POWERHOUSE CABLE ROUTING II

REVISION	DATE	DESCRIPTION	CHKD.	APPR.
G	95 SEPT	AS CONSTRUCTED		
F	8/22/94	ADDED SHEET 52.1 (IRRIGATION CONTROL WIRING)		
E	7/14/94	USED RESERVED SHEETS 100.1 THRU 100.3		
D	12/21/93	ADDED SHEET 89.1		
C	8/23/93	ADDED SHEET 50.1, CORRECTED TITLE OF SHEET 50		
B	4/14/93	ADDED SHEETS 94.1 AND 94.2		
A		ADDED FOUR SHEETS		

U. S. ARMY ENGINEER DISTRICT
WALLA WALLA, WASHINGTON

SUMMERS
DESIGNED BY
ROGERS/GLASSLEY
DRAWN BY (CADD DRAWING)
CHECKED BY
SUPERVISED
CHIEF STRUCT. DES. SEC.
SUBMITTED
CHIEF DESIGN BRANCH
RECOMMENDED:

MCNARY LOCK AND DAM
COLUMBIA RIVER, OREGON AND WASHINGTON
PERMANENT JUVENILE FISH FACILITIES
INDEX TO DRAWINGS - VOLUME I

APPROVED
DATE 92 JUN 17

SCALE AS SHOWN | INV. NO. 92-B-32
SHEET NO. 1 | FILE NO. MDG-1-0-15/3

COMPUTER AIDED DESIGN & DRAFTING
DESIGN FILENAME: /usr2/cadd/mjf/mjfsldgn
PLOTTING TIME: 2-24-1998 14:29
PLOTTING METHOD: PHPGL94

REFERENCE FILES ATTACHED | LEVELS ON FOR CONTRACT DRWGS OFF=50 | SCALE 1:8

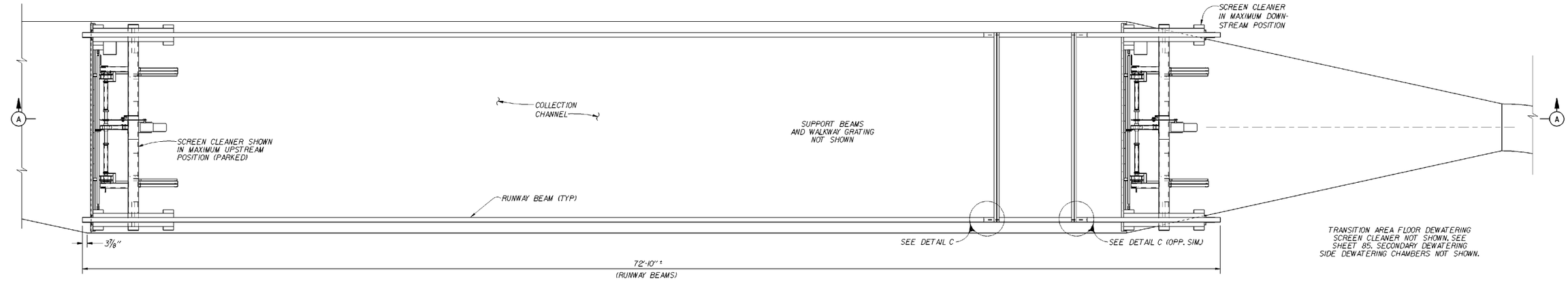

PLAN

SCALE IN FEET

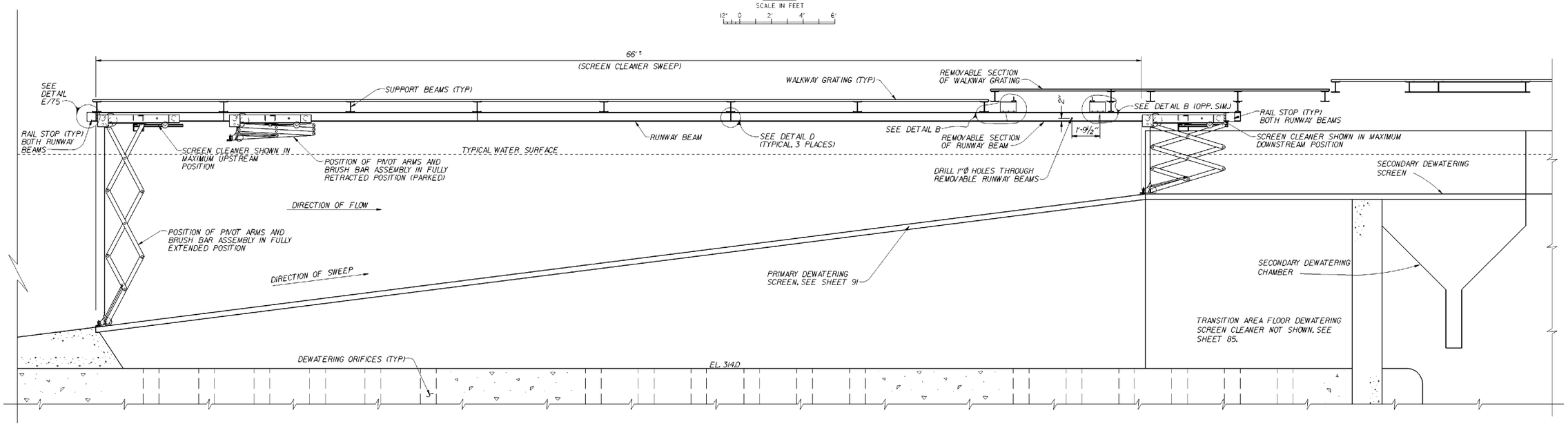

SECTION A

SCALE IN FEET

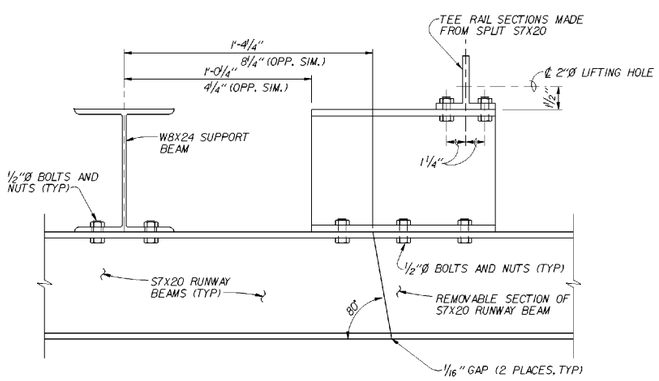

DETAIL B

SCALE IN INCHES

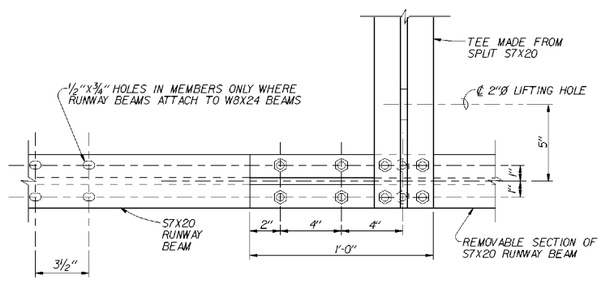

DETAIL C

SCALE IN INCHES

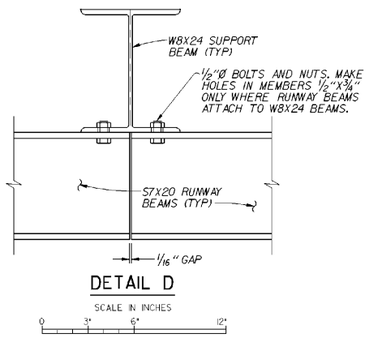

DETAIL D

SCALE IN INCHES

NOTES:

1. SCREEN CLEANER SHOWN HERE WILL BE SYNCHRONIZED WITH THE ONE SHOWN ON SHEET 85 TO PREVENT INTERFERENCE.
2. SEE SHEET 98.1 FOR ELECTRICAL DETAILS.

REVISION	DATE	DESCRIPTION	CHKD.	APPR.
A	95 SEPT	AS CONSTRUCTED		

U. S. ARMY ENGINEER DISTRICT
WALLA WALLA, WASHINGTON

DESIGNED BY: K. RENSHAW
DRAWN BY (CADD DRAWN): K. RENSHAW
CHECKED BY: S. ROSS
SUPERVISED:
CHIEF MECH. DES. SEC.
SUBMITTED:
CHIEF DESIGN BRANCH
RECOMMENDED:
CHIEF

MCNARY LOCK AND DAM

COLUMBIA RIVER, OREGON AND WASHINGTON

PERMANENT JUVENILE FISH FACILITIES

PRIMARY DEWATERING

RECTANGULAR AREA FLOOR SCREEN CLEANER
PLAN AND ELEVATION

APPROVED: DATE 92 JUN 17
SCALE AS SHOWN | INV. NO. 92-B-32
SHEET NO. 81 | FILE NO. MDF-1-3-9/29

COMPUTER AIDED DESIGN & DRAFTING
DESIGN FILENAME: usr2/cad/mjf/m1f081.dgn
PLOTTING TIME: 07-JUN-1995 10:01
PLOTTING METHOD: PRINTERS

REFERENCE FILES ON FOR CONTRACT DRWGS
MJF.BLK.A
MJFM82.DGN,RE,RP,RED,PD

REFERENCE FILES ATTACHED
MJF.BLK.A MN66.DGN,PLAN,ELV
MN64.DGN,S MJFM8.DGN,RB
MJFM82.DGN,RE,RP,RED,PD,RREF

LEVELS ON FOR CONTRACT DRWGS
1-62

SCALE
3/8"=1'-0"

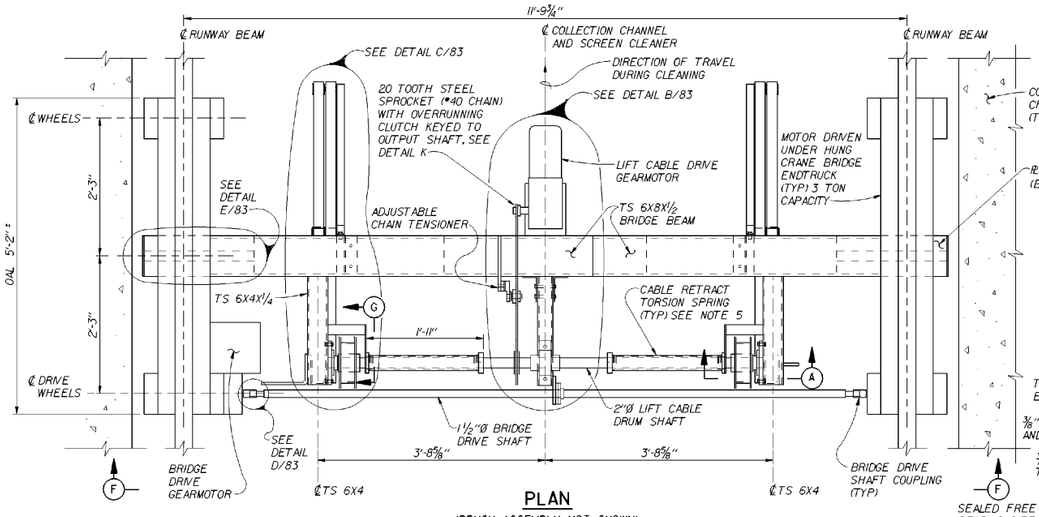

PLAN

(BRUSH ASSEMBLY NOT SHOWN)

SCALE IN FEET

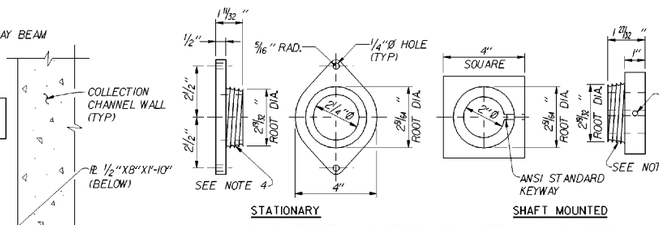

CABLE RETRACT TORSION SPRING HOLDERS

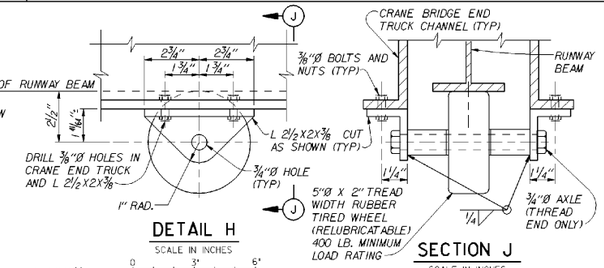

DETAIL H

SCALE IN INCHES

SECTION J

SCALE IN INCHES

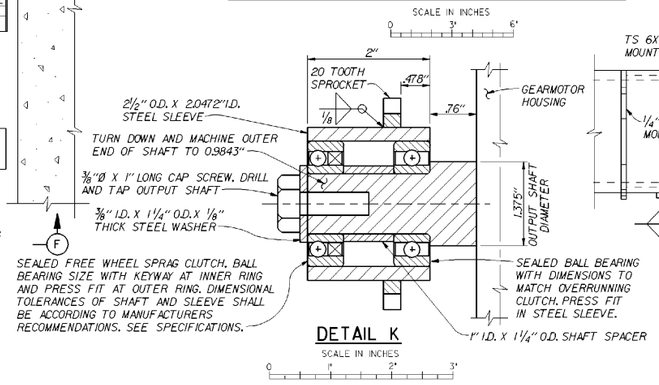

DETAIL K

SCALE IN INCHES

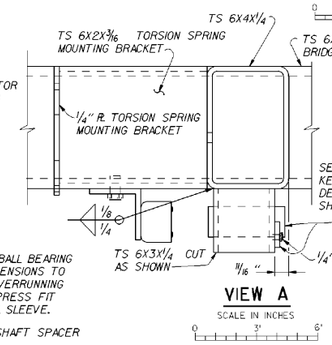

VIEW A

SCALE IN INCHES

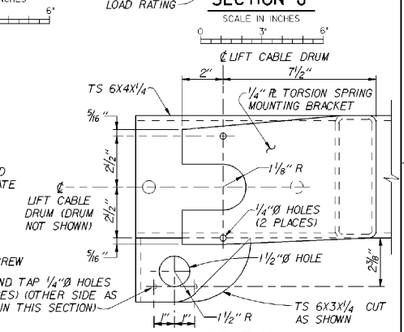

SECTION G

SCALE IN INCHES

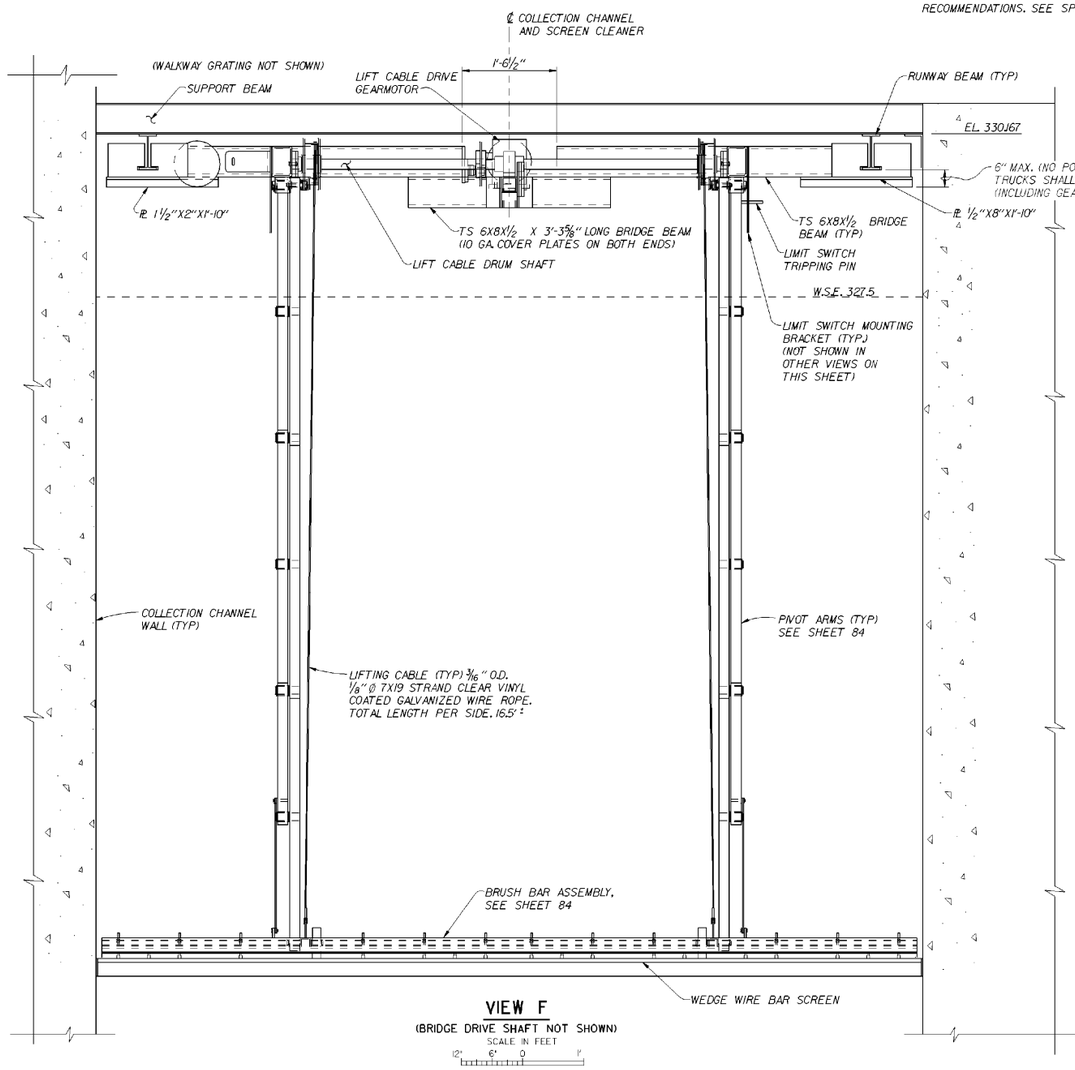

VIEW F

(BRIDGE DRIVE SHAFT NOT SHOWN)

SCALE IN FEET

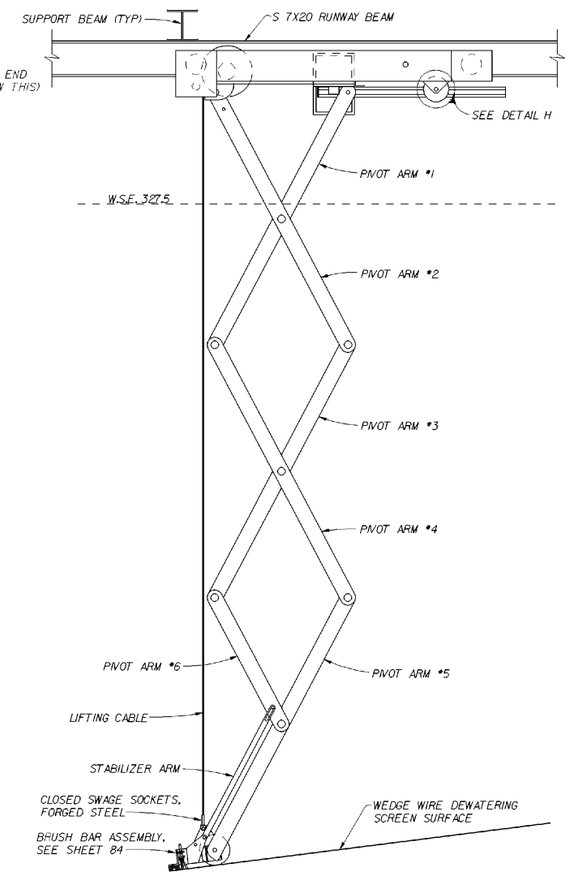

SIDE ELEVATION

(ARMS EXTENDED)

SCALE IN FEET

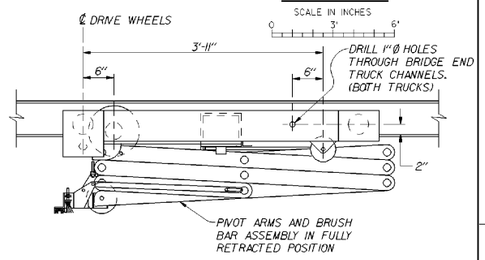

SIDE ELEVATION

(ARMS RETRACTED)

SCALE IN FEET

NOTES:

1. UNLESS INDICATED OTHERWISE, ALL ROUND STEEL TUBING SHALL BE ASTM A-513, TYPE 5. ALL RECTANGULAR STEEL TUBING SHALL BE ASTM A-500 OR A-513 AND ALL PLATE/BAR SHALL BE ASTM A-36.
2. PAINT ALL FERROUS METALS, EXCLUDING STAINLESS STEEL AND THE PIVOT ARM ASSEMBLY, WITH SYSTEM 2, UNLESS INDICATED OTHERWISE.
3. SEE SHEET 84 FOR PIVOT ARM DETAILS.
4. TWO STATIONARY AND TWO SHAFT MOUNTED TORSION SPRING HOLDERS REQUIRED. GROOVE FORM SHALL MATCH INSIDE OF TORSION SPRINGS. GROOVE FORMS ON STATIONARY TORSION SPRING HOLDERS ARE OPPOSITE HAND THREAD FROM THOSE ON SHAFT MOUNTED TORSION SPRING HOLDERS. GROOVE FORMS ON STATIONARY TORSION SPRING HOLDERS ARE OPPOSITE HAND THREAD.
5. TORSION SPRINGS, O.D.=3"; WIRE DIAMETER = .2070" (W & M GAGE #5); NUMBER OF ACTIVE COILS = 88; TOTAL NUMBER OF COILS = 96; FREE LENGTH = 19.87" (NO WRAPPING); LENGTH WRAPPED = 21.11" (6 WRAPS); ROTATONAL SPRING CONSTANT = 3.32 IN-LB/RADIAN; WIRE MATERIAL = MUSIC WIRE. TWO TORSIONAL SPRINGS WITH OPPOSITE HAND WRAPPING REQUIRED. SEE SPECIFICATIONS.
6. SEE SHEET 98.1 FOR ELECTRICAL DETAILS.

REVISION	DATE	DESCRIPTION	CHKD.	APPR.
A	95 SEPT	AS CONSTRUCTED		

U . S . ARMY ENGINEER DISTRICT
WALLA WALLA, WASHINGTON

K.RENSHAW — DESIGNED BY
K.RENSHAW — DRAWN BY (CADD DRAWN)
S.ROSS — CHECKED BY
SUPERVISED
CHIEF HEAD, DES. SEC.
SUBMITTED:
CHIEF DESIGN BRANCH
RECOMMENDED:
CHIEF

MCNARY LOCK AND DAM

COLUMBIA RIVER, OREGON AND WASHINGTON

PERMANENT JUVENILE FISH FACILITIES

PRIMARY DEWATERING

RECTANGULAR AREA FLOOR SCREEN CLEANER

SECTIONS AND DETAILS

APPROVED: DATE 92 JUN 17

SCALE AS SHOWN | INV. NO. 92-B-32

SHEET NO. 82 | FILE NO. MDF-1-3-9/30

COMPUTER AIDED DESIGN & DRAFTING

DESIGN FILENAME: usr2/cad/mjf/mjf082.dgn
PLOTTING TIME: 17-JUN-1998 10:10
PLOTTING METHOD: PRINTER

CONT. NO. 92-C-50 VOL. I

REFERENCE FILES ATTACHED: YES MJFE099.DGN,E; MJF.BLK,A; MJFM81.DGN,L; MJFM83.DGN,W

LEVELS ON FOR CONTRACT DRWGS: 1-9,12-14,16-46,53-63 (SEE LEVEL LOG BELOW)

SCALE: 1" : 1' - 0"

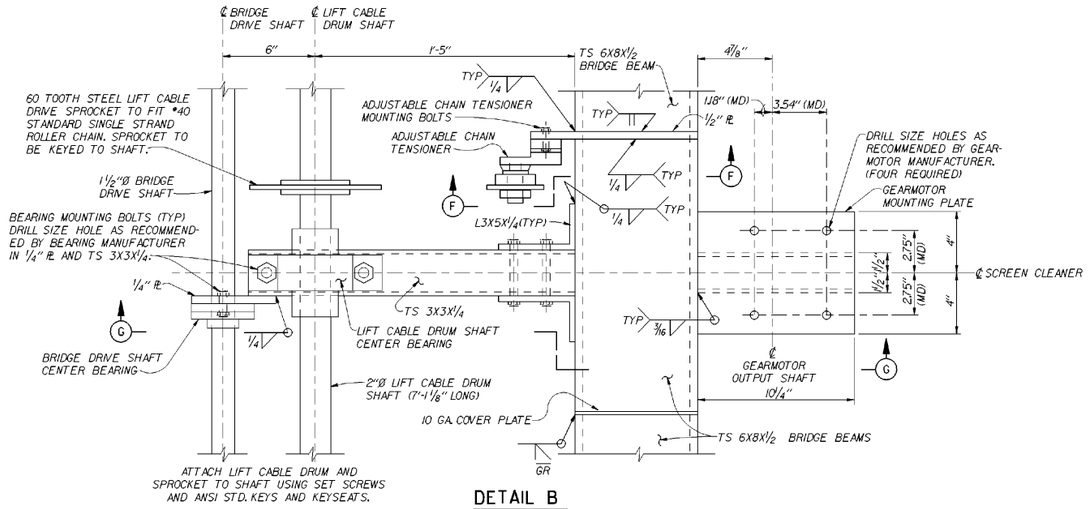

DETAIL B
82
(CHAIN AND GEARMOTOR NOT SHOWN)
SCALE IN INCHES

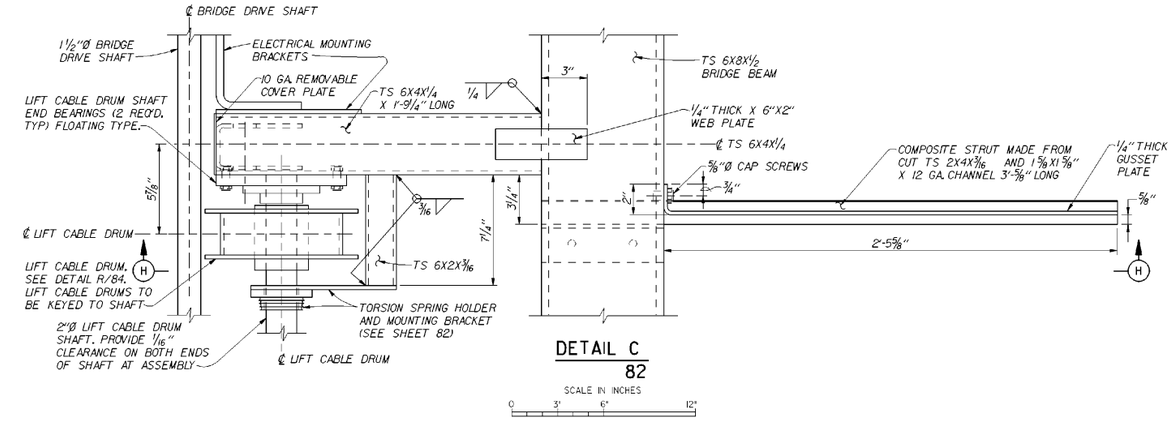

DETAIL C
82
SCALE IN INCHES

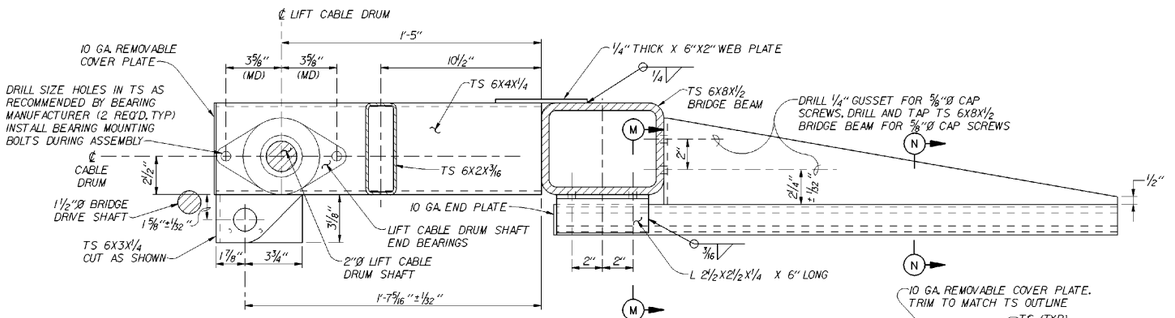

SECTION H
(CABLE DRUM NOT SHOWN)
(ELECTRICAL MOUNTING BRACKETS NOT SHOWN)
SCALE IN INCHES

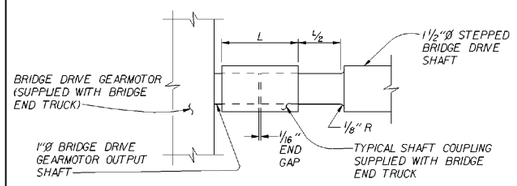

DETAIL D
82
SCALE IN INCHES

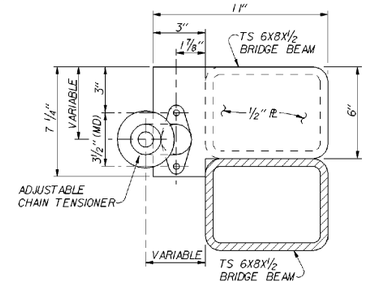

SECTION F
SCALE IN INCHES

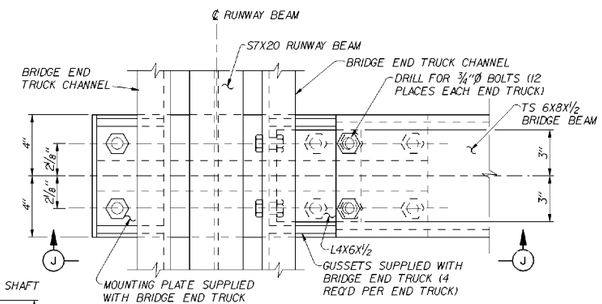

DETAIL E
82
(SEE NOTE 4)
SCALE IN INCHES

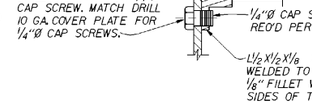

TYPICAL REMOVABLE COVER PLATE DETAIL
(REQUIRED ON ALL REMOVABLE COVER PLATES)
SCALE IN INCHES

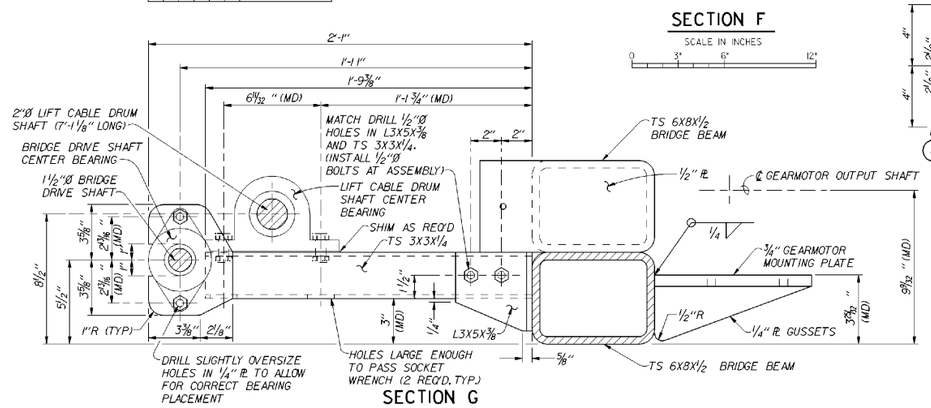

SECTION G
(CHAIN TENSIONER NOT SHOWN)
SCALE IN INCHES

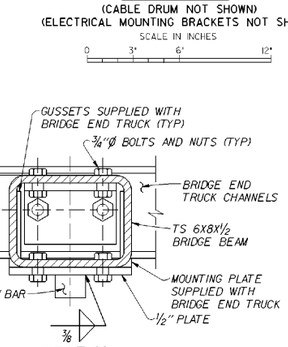

SECTION K
(S7X20 RUNWAY BEAM NOT SHOWN)
SCALE IN INCHES

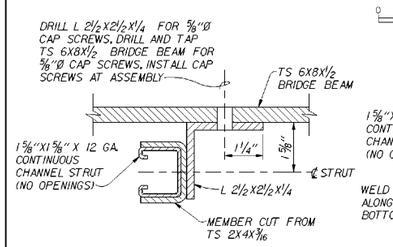

SECTION M
SCALE IN INCHES

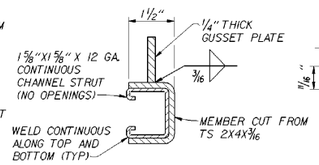

SECTION N
SCALE IN INCHES

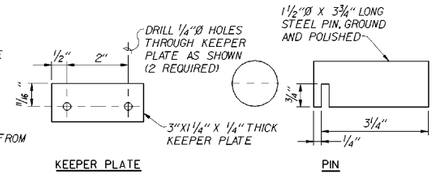

PIN AND KEEPER PLATE DETAIL
(2 OF EACH REQUIRED)
SCALE IN INCHES

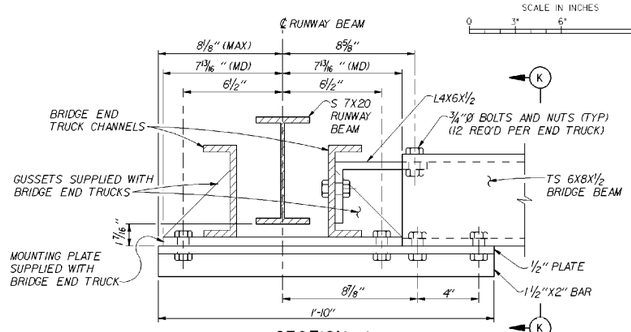

SECTION J
SCALE IN INCHES

NOTES:

1. UNLESS INDICATED OTHERWISE, ALL ROUND STEEL TUBING SHALL BE ASTM A513, TYPE 5. ALL RECTANGULAR STEEL TUBING SHALL BE ASTM A500 OR A513 AND ALL PLATE/BAR SHALL BE ASTM A36.
2. PAINT ALL FERROUS METALS, EXCLUDING STAINLESS STEEL AND THE PIVOT ARM ASSEMBLIES, WITH SYSTEM 2, UNLESS INDICATED OTHERWISE.
4. BRIDGE END TRUCKS SHALL INCLUDE AS ONE INTEGRAL UNIT, WHEELS, AXLES, AXLE BEARINGS, TRUCK ANGLES, TRUCK ANGLE END PLATES, AND GUSSETS AND MOUNTING PLATES SHOWN ON THIS DRAWING. MOUNTING PLATES DO NOT HAVE TO BE PREBORED.
5. PLACE BEVEL WELDS AT ENDS WHERE COVER PLATES ARE REMOVABLE. USE 3 PASS WELDS WHERE CORNER RADIUS OF TUBES MEET THE CORRESPONDING WELD SURFACES.
6. SEE SHEET 98.1 FOR ELECTRICAL DETAILS.

WELD LEGEND:

GR	GRIND SMOOTH
CP	COMPLETE PENETRATION
TYP	TYPICAL
T&B	TOP AND BOTTOM

COMPUTER AIDED DESIGN & DRAFTING

DESIGN FILENAME: /usr2/cad/m11/m11ed03.dgn
PLOTTING TIME: 17-JUN-1998 10:13
PLOTTING METHOD: PRINTER

REVISION	DATE	DESCRIPTION	CHKD.	APPR.
A	95 SEPT	AS CONSTRUCTED		

U. S. ARMY ENGINEER DISTRICT
WALLA WALLA, WASHINGTON

DESIGNED BY: K. RENSHAW
DRAWN BY: K. RENSHAW (CADD DRAWN)
CHECKED BY: S. ROSS
SUPERVISED:
CHIEF MECH. DES. SEC.
SUBMITTED:
CHIEF DESIGN BRANCH
RECOMMENDED:

MCNARY LOCK AND DAM
COLUMBIA RIVER, OREGON AND WASHINGTON
PERMANENT JUVENILE FISH FACILITIES
PRIMARY DEWATERING
RECTANGULAR AREA FLOOR SCREEN CLEANER
BRIDGE DETAILS

APPROVED:
DATE 92 JUN 17

SCALE AS SHOWN | INV. NO. 92-B-32
SHEET NO. 83 | FILE NO. MDF-1-3-9/31

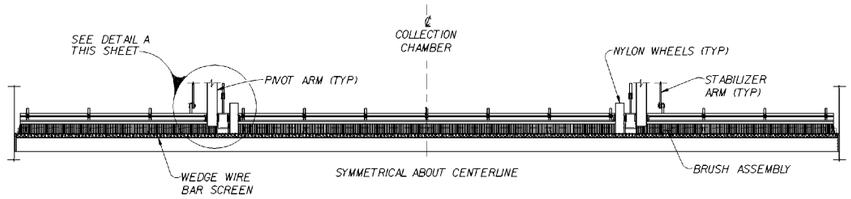

ELEVATION: BRUSH ASSEMBLY

SCALE IN FEET

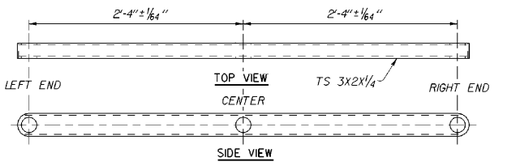

TYPICAL DETAIL FOR PIVOT ARMS #1 THROUGH #5

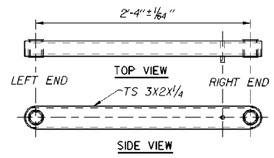

PIVOT ARM #6

SCALE IN FEET

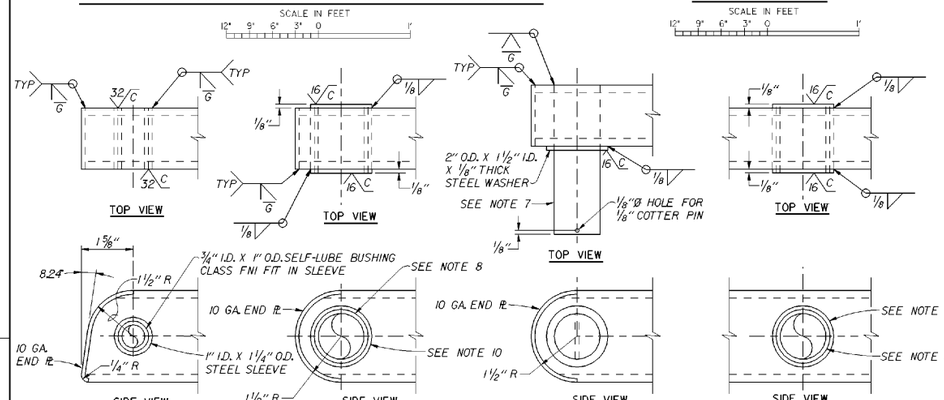

SCALE IN INCHES

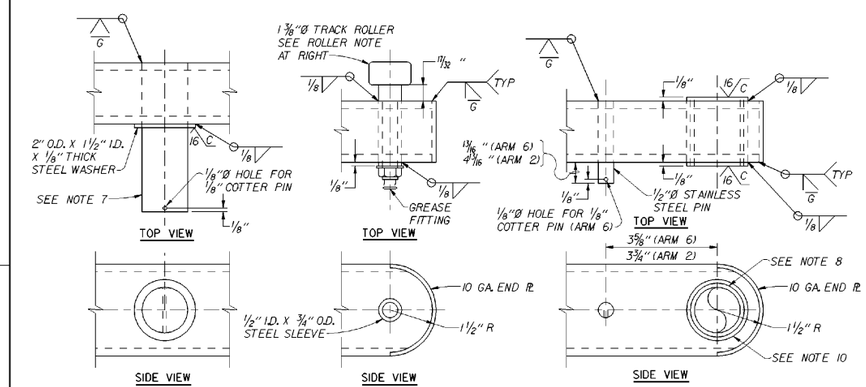

SCALE IN INCHES

PIVOT ARM DETAIL LEGEND				
PIVOT ARM NUMBER	LEFT END DETAIL	CENTER DETAIL	RIGHT END DETIAL	
1	G	J	K	SEE NOTE 6
2	L (OPP. SIM) E	H	E (OPP. SIM)	
3	G	J	G (OPP. SIM)	
4	E	H	E (OPP. SIM)	
5	B	J	G (OPP. SIM)	
6	E	-	L	

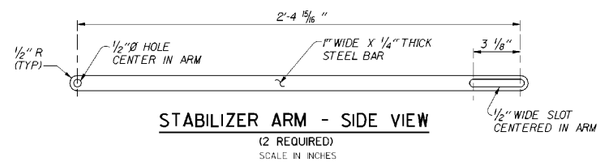

STABILIZER ARM - SIDE VIEW

(2 REQUIRED)

SCALE IN INCHES

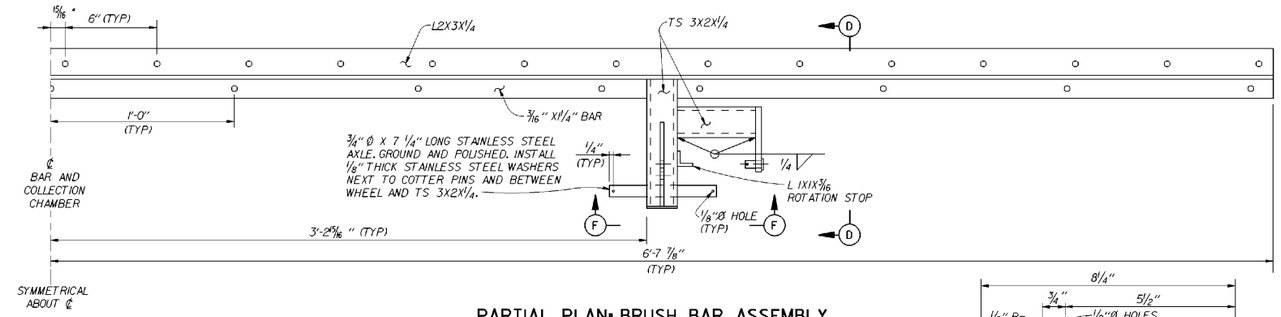

PARTIAL PLAN: BRUSH BAR ASSEMBLY

SCALE IN INCHES

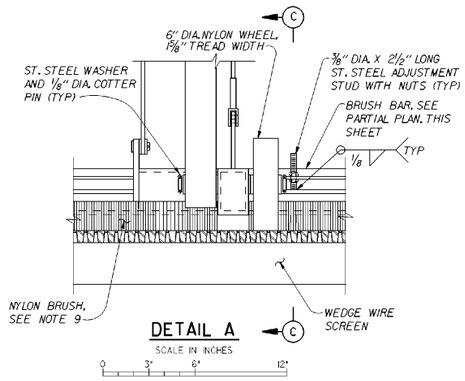

DETAIL A

SCALE IN INCHES

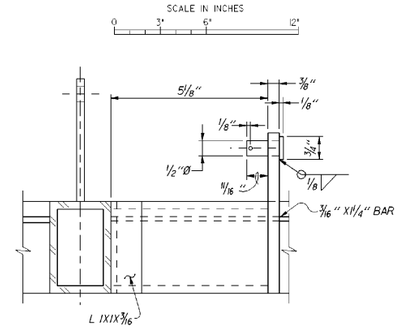

SECTION F

SCALE IN INCHES

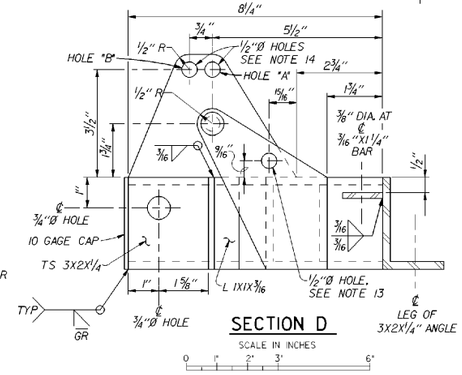

SECTION D

SCALE IN INCHES

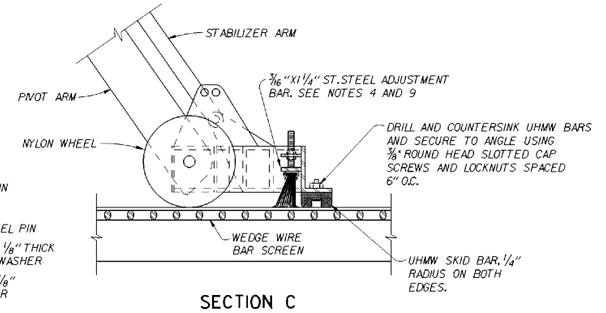

SECTION C

SCALE IN INCHES

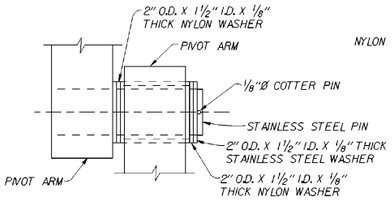

TYPICAL PIVOT POINT DETAIL

SCALE IN INCHES

ROLLER NOTE:
ROLLER DIAMETER: 1.375"
ROLLER WIDTH: .750"
STUD DIAMETER: .5000" (EXTENDED LENGTH)
RELUBRICATABLE
MINIMUM WORKING LOAD RATING: 2200 LB.
ROLLER BEARINGS SHALL BE SEALED

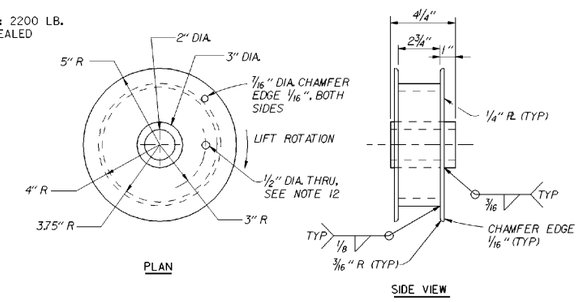

DETAIL R : CABLE DRUM

83

(2 OPPOSITE REQUIRED)

SCALE IN INCHES

NOTE:
KEYWAY AND SET SCREWS NOT SHOWN

NOTES:

1. PAINT ALL FERROUS METALS IN THE PIVOT ARM ASSEMBLIES AND BRUSH ASSEMBLY, EXCLUDING STAINLESS STEEL, WITH SYSTEM 21.
2. SEE SHEET 83 FOR WELD LEGEND.
3. UNLESS INDICATED OTHERWISE, ALL ROUND STEEL TUBING SHALL BE ASTM A513, TYPE 5. ALL RECTANGULAR STEEL TUBING SHALL BE ASTM A-500 OR A-513 AND ALL PLATE/BAR SHALL BE ASTM A-36.
4. METHOD OF ATTACHING BRUSH TO THE 3/16" BAR MAY VARY WITH BRUSH MANUFACTURER. THE CONTRACTOR SHALL SUBMIT HIS CHOSEN METHOD FOR APPROVAL.
5. INSTALL 1/8" THICK NYLON WASHERS ON EACH SIDE OF PIVOT ARMS.
6. TWO PIVOT ARMS EACH REQUIRED FOR ARMS 1, 2, 3, 4 AND 6. TWO OPPOSITE PIVOT ARMS REQUIRED FOR PIVOT ARM 5. 1/2"Ø PIN REQUIRED ON ONLY ONE ARM #2. ORIENTATION OF PINS AND ROLLERS IS AS SHOWN IN SIDE AND TOP VIEWS ON THIS SHEET.
7. 1 1/2"Ø X 4 5/16" LONG STAINLESS STEEL PIN. CLASS RC1 FIT IN SELF-LUBE BUSHING.
8. 1 1/2" I.D. X 1 3/4" O.D. SELF-LUBE BUSHING. CLASS FNI FIT IN STEEL SLEEVE.
9. NYLON STRIP BRUSH WITH #7 ST. STEEL CHANNEL CONSTRUCTION, 2 1/2" OVERALL HEIGHT, .028" STD. DENSITY BRISTLES. 3 PIECES REQ'D, 1 @ 6'-5 3/4", 2 @ 3'-2 7/8".
10. 1 3/4" I.D. X 2" O.D. STEEL SLEEVE
11. FOLLOWING ASSEMBLY WELDING, FILL EACH PIVOT ARM WITH POLYURETHANE FOAM THRU HOLES DRILLED IN END CAPS. AFTER FOAM HAS CURED, SEAL WELD (AND GRIND FLUSH) ALL FILL HOLES. FOAM SHALL BE ANCHOR FOAM AND COATINGS' POLYFOAM SYSTEM UTC 202, OR EQUAL.
12. DRILL THRU BOTH 1/4" SIDE PLATES. FASTEN CABLE TO DRUM USING 1/2"Ø BOLT WITH WASHERS AND LOCKNUT. PASS CABLE THRU 7/16"Ø HOLE AND TERMINATE USING A STANDARD THIMBLE AND TWO CABLE CLAMPS.
13. INSTALL 1/2"Ø NUTS AND BOLTS THROUGH BRACKETS DURING MAINTENANCE AND REMOVAL/INSTALLATION TO PREVENT BRUSH BAR AND PIVOT ARMS FROM DROPPING SHOULD A CABLE OR CHAIN FAILURE OCCUR. SEE SHEET 98J.
14. FOR INITIAL OPERATION AND TESTING, CONNECT LIFTING CABLE AT HOLE "A". IF BRUSHING ACTION IS NOT SATISFACTORY, RECONNECT LIFTING CABLE AT HOLE "B".

REVISION	DATE	DESCRIPTION	CHKD.	APPR.
A	95 SEPT	AS CONSTRUCTED		

U. S. ARMY ENGINEER DISTRICT
WALLA WALLA, WASHINGTON

MCNARY LOCK AND DAM

COLUMBIA RIVER, OREGON AND WASHINGTON

PERMANENT JUVENILE FISH FACILITIES
PRIMARY DEWATERING

RECTANGULAR AREA FLOOR SCREEN CLEANER
PIVOT ARMS AND BRUSH BAR DETAILS

DESIGNED BY: K. RENSHAW
DRAWN BY (CADD DRAWN): K. RENSHAW
CHECKED BY: S. ROSS
SUPERVISED:
CHIEF, MECH. DES. SEC.
SUBMITTED:
CHIEF, DESIGN BRANCH
RECOMMENDED:
CHIEF

APPROVED:
DATE 92 JUN 17
SCALE AS SHOWN
INV. NO. 92-B-32
SHEET NO. 84
FILE NO. MDF-1-3-9/32

COMPUTER AIDED DESIGN & DRAFTING
DESIGN FILENAME: /usr2/cad/mjf/mjf084.dgn
PLOTTING TIME: 2-JUN-1998 10:01
PLOTTING METHOD: MVP8PH4

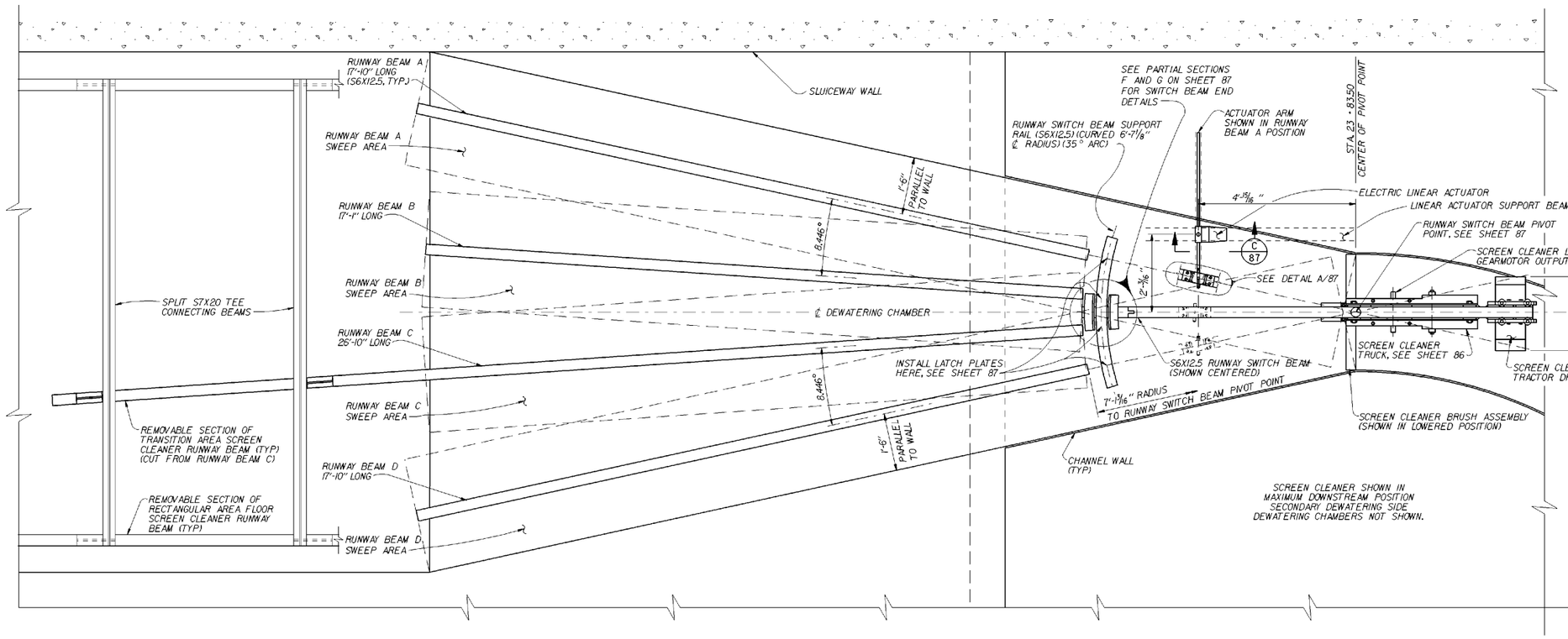

TRANSITION AREA FLOOR SCREEN CLEANER - PLAN

SCALE IN FEET
12" 6" 0 1' 2'

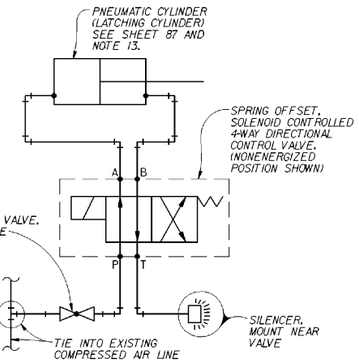

PNEUMATIC SCHEMATIC

ALL PNEUMATIC EQUIPMENT AND PIPING SHALL BE RATED FOR 150 PSI WORKING PRESSURE MINIMUM. SEE NOTE 12.

NOTES:

1. ALL NUMBERED NOTES REFFERED TO ON SHEETS HAVING DETAILS FOR THE TRANSITION AREA FLOOR SCREEN CLEANER ARE ON THIS SHEET.
2. PAINT ALL FERROUS METALS, EXCLUDING STAINLESS STEEL, IN THE BRUSH ARM AND BRUSH BAR ASSEMBLY WITH SYSTEM 21. PAINT OTHER FERROUS METALS, EXCLUDING STAINLESS STEEL, WITH SYSTEM 2.
3. UNLESS INDICATED OTHERWISE, ALL ROUND STEEL TUBING SHALL BE ASTM A513, TYPE 5, ALL RECTANGULAR STEEL TUBING SHALL BE ASTM A500 OR A513, AND ALL PLATE/BAR SHALL BE ASTM A36.
4. DIMENSIONS FOLLOWED BY THE LETTERS "MD" ARE MANUFACTURER DEPENDENT AND MAY REQUIRE SLIGHT ADJUSTMENT DEPENDING ON THE ACTUAL EQUIPMENT SUPPLIED.
5. ALL BOLTED CONNECTIONS SHALL BE SECURED BY USING EITHER LOCK NUTS OR LOCK WASHERS UNLESS SPECIFIED OTHERWISE. ALL BOLTS AND CAP SCREWS SHALL BE MADE FROM GRADE 5 MATERIAL.
6. THE SCREEN CLEANER LIFT GEARMOTOR ROTATION IS CLOCKWISE AS SEEN ON THIS SHEET.
7. THE METHOD OF ATTACHING THE BRUSH TO THE 3/16" BAR MAY VARY WITH BRUSH MANUFACTURER. THE CONTRACTOR SHALL SUBMIT CHOSEN METHOD FOR APPROVAL.
8. THE BRUSH SHALL BE NYLON STRIP BRUSH WITH #7 STAINLESS STEEL CHANNEL CONSTRUCTION, 2 1/2" OVERALL HEIGHT, .028" STD. DENSITY BRISTLES. TWO PIECES, 1'-4 9/16" LONG EACH, ARE REQUIRED.
9. THE LENGTH OF THE LOWER LINK MAY REQUIRE ADJUSTMENT AFTER THE SYSTEM HAS BEEN INSTALLED. ADJUST LENGTH SO THAT THE PIN IS NEAR THE BOTTOM OF THE SLOTTED HOLE WITH THE BRUSH RESTING ON THE SCREEN SURFACE AND THE LIFTING LINKS IN THE BRUSH "LOWERED" POSITION.
10. SPRING SPECIFICATION: FREE LENGTH: 3 1/4"; SPRING DIAMETER: 15/16"; SPRING RATE: 14 LB/IN, SQUARED AND GROUND ENDS, WIRE DIAMETER: .0907"; NUMBER OF ACTIVE COILS: 13.78.
11. LATCH PLATE MOUNTING: ALIGN RUNWAY SWITCH BEAM WITH RUNWAY BEAM. CLAMP OR OTHERWISE TEMPORARILY SECURE RUNWAY SWITCH BEAM END TO RUNWAY BEAM END TO MAINTAIN ALIGNMENT. POSITION LATCH PLATE OVER END OF LATCH PIN AND EXTEND LATCH PIN THROUGH LATCH PLATE AND RUNWAY SWITCH BEAM SUPPORT RAIL. CENTER HOLE IN LATCH PLATE AROUND LATCH PIN AND CLAMP OR OTHERWISE TEMPORARILY SECURE LATCH PLATE TO RUNWAY SWITCH BEAM SUPPORT RAIL. MATCH DRILL 1/4"Ø HOLES AND INSTALL 1/4"Ø BOLTS. REMOVE TEMPORARY SECURING DEVICES. REPEAT PROCEDURE FOR REMAINING RUNWAY BEAMS.
12. AIR LINES SHALL BE GALVANIZED STEEL EXCEPT THAT FLEXIBLE SECTIONS OF AIR LINES SHALL BE USED FOR CONNECTIONS TO THE PNEUMATIC CYLINDER AND ACROSS THE PIVOT POINT. PORT SIZE SHALL BE 1/8" NPT MIN.
13. STAINLESS STEEL DOUBLE ACTING AIR CYLINDER WITH FRONT NOSE MOUNTING, 2" STROKE, 3/4" BORE, 303 STAINLESS STEEL ROD, BRONZE ROD GUIDE BUSHING, 304 STAINLESS STEEL BODY, BUNA-N OIL RESISTANT LOW BREAK AWAY PISTON AND PISTON ROD SEALS (NOT O-RINGS), AND MAGNETIC READ SWITCHES TO INDICATE BOTH EXTENDED AND RETRACTED POSITIONS.
14. ELECTRICAL LIMIT SWITCH TRIPPING ARM IS REQUIRED ON ONLY ONE LIFTING ARM UPPER LINK AND WILL BE USED FOR INDICATING WHEN THE BRUSH ASSEMBLY ARM IS LOWERED.
15. SEE SHEET 98.2 FOR ELECTRICAL DETAILS.

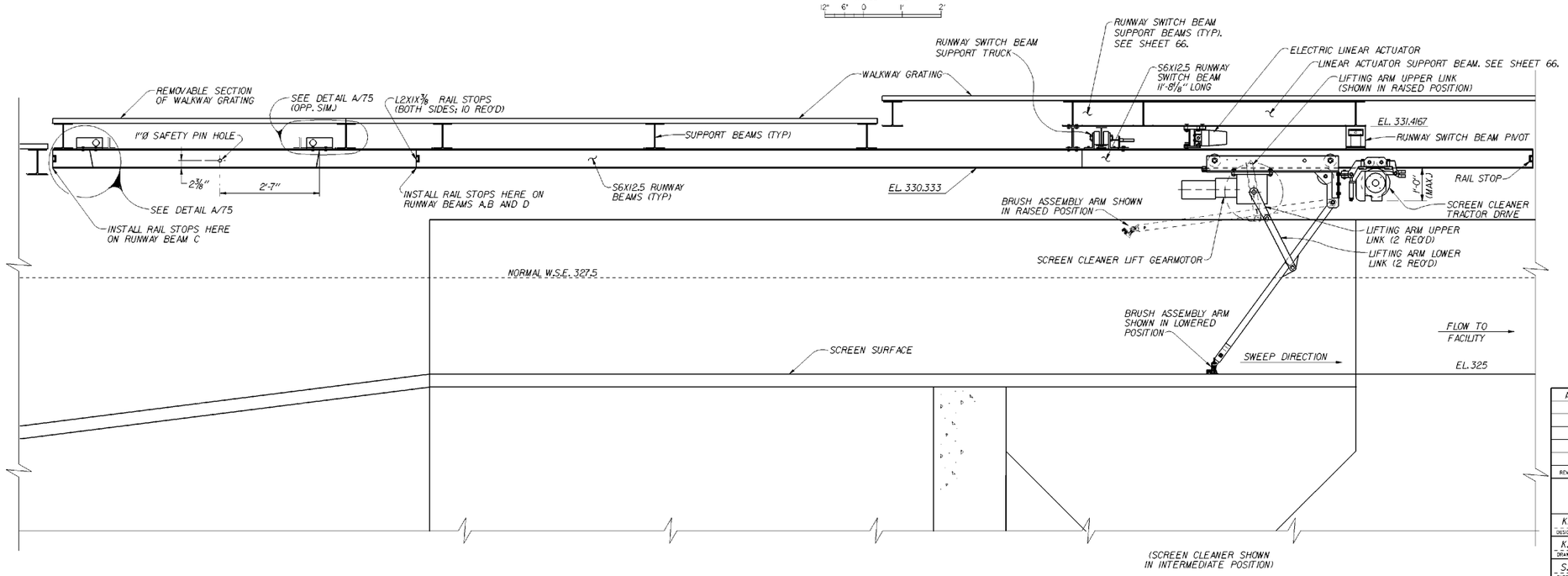

TRANSITION AREA FLOOR SCREEN CLEANER - ELEVATION

SCALE IN FEET
12" 6" 0 1' 2'

REVISION	DATE	DESCRIPTION	CHKD.	APPR.
A	95 SEPT	AS CONSTRUCTED		

U. S. ARMY ENGINEER DISTRICT
WALLA WALLA, WASHINGTON

K. RENSHAW — DESIGNED BY
K. RENSHAW — DRAWN BY (CADD DRAWN)
S. ROSS — CHECKED BY
SUPERVISED
CHIEF MECH. DES. SEC.

MCNARY LOCK AND DAM

COLUMBIA RIVER, OREGON AND WASHINGTON

PERMANENT JUVENILE FISH FACILITIES

PRIMARY DEWATERING

TRANSITION AREA FLOOR SCREEN CLEANER
PLAN AND ELEVATION

SUBMITTED
CHIEF DESIGN BRANCH
RECOMMENDED
CHIEF

APPROVED
DATE 92 JUN 17

SCALE AS SHOWN | INV. NO. 92-B-32
SHEET NO. 85 | FILE NO. MDF-1-3-9/33

COMPUTER AIDED DESIGN & DRAFTING
DESIGN FILENAME: /usr2/cad/mjf/mjf085.dgn
PLOTTING TIME: 17-JUN-1998 10:19
PLOTTING METHOD: PRPLOT14

REFERENCE FILES ON FOR CONTRACT DRWGS: MJF.BLK, MJFM81.DGN,ELV2,PLAN2
REFERENCE FILES ATTACHED: MJF.BLK, MJFM93.DGN,SD, MN66.DGN,ELV,PLAN, MJFM81.DGN,ELV2,PLAN2
LEVELS ON FOR CONTRACT DRWGS: 1-62
SCALE: 3/4" = 1' - 0"

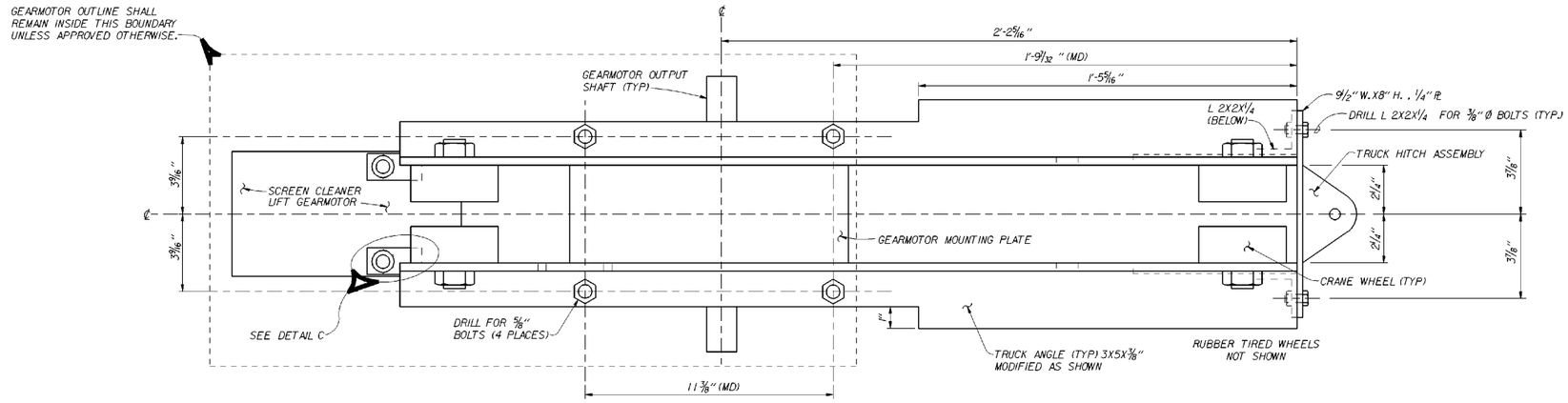

TRUCK PLAN

(S6X12.5 RUNWAY BEAM NOT SHOWN)

SCALE IN INCHES

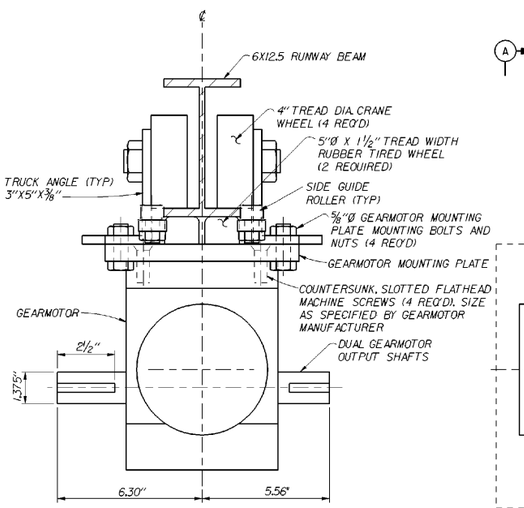

VIEW A

SCALE IN INCHES

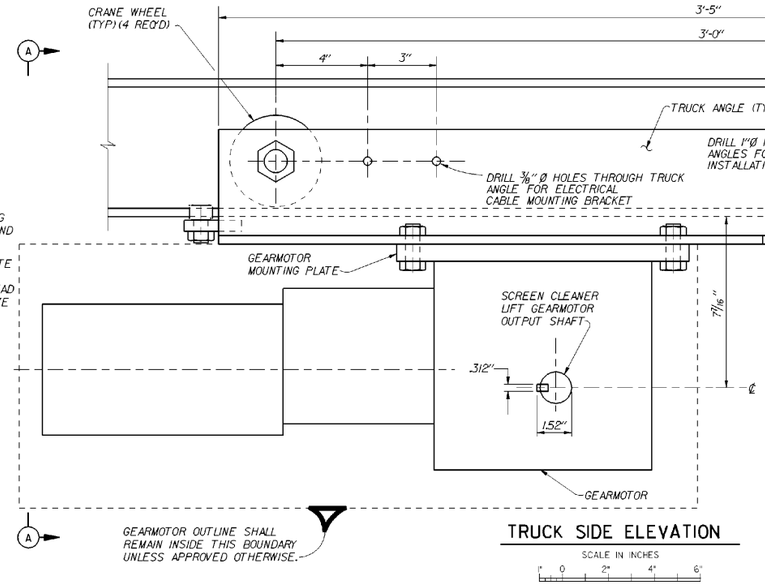

TRUCK SIDE ELEVATION

SCALE IN INCHES

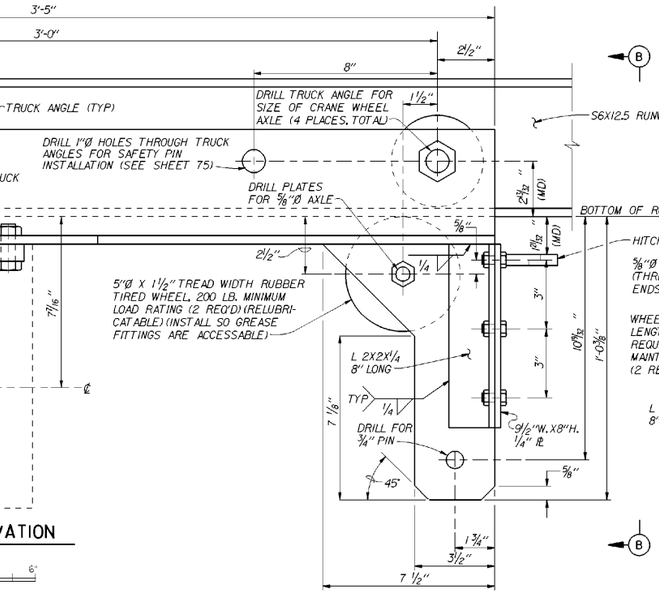

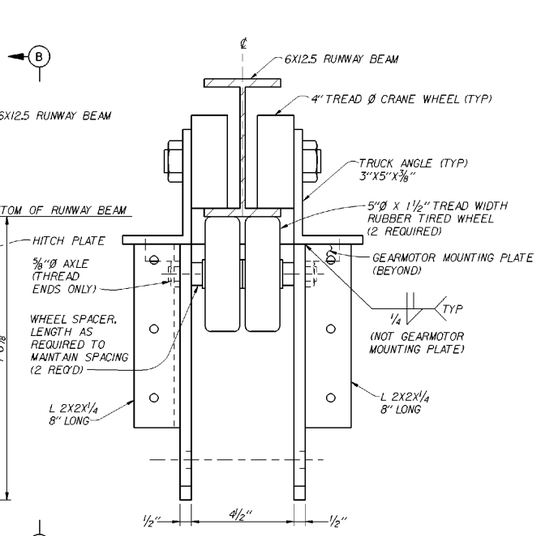

VIEW B

(GEARMOTOR NOT SHOWN)
(9 1/2W. X8" H. 1/4" R AND HITCH PLATE NOT SHOWN)

SCALE IN INCHES

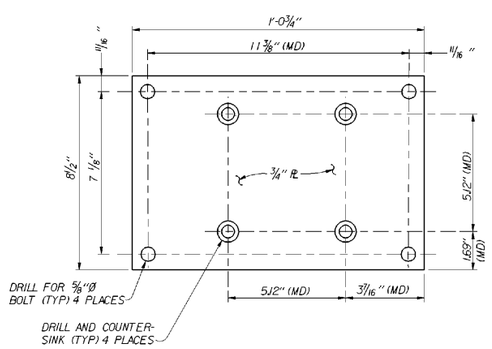

GEARMOTOR MOUNTING PLATE

SCALE IN INCHES

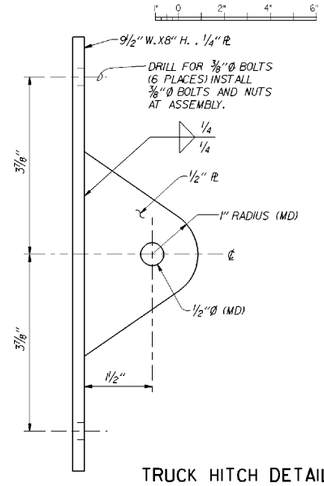

TRUCK HITCH DETAIL

SCALE IN INCHES

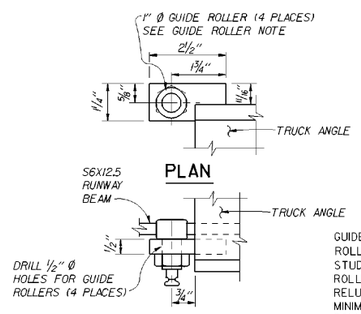

PLAN

ELEVATION

SIDE GUIDE ROLLER : DETAIL C

SCALE IN INCHES

GUIDE ROLLER NOTE:
ROLLER DIAMETER : 1.000'
STUD DIAMETER : 0.4375"
ROLLER WIDTH : 0.625"
RELUBRICATABLE
MINIMUM WORKING LOAD RATING : 1700 LB.
ROLLER BEARINGS SHALL BE SEALED

COMPUTER AIDED DESIGN & DRAFTING

DESIGN FILENAME: usr2/cad/mjf/m1fm16.dgn
PLOTTING TIME: 17-JUN-1998 X:0
PLOTTING METHOD: 9997/1194

NOTE: SEE SHEET 85 FOR NUMBERED NOTES.

REVISION	DATE	DESCRIPTION	CHKD.	APPR.
A	95 SEPT	AS CONSTRUCTED		

U . S . ARMY ENGINEER DISTRICT
WALLA WALLA, WASHINGTON

K.RENSHAW — DESIGNED BY
K.RENSHAW — DRAWN BY (CADD DRAWN)
S.ROSS — CHECKED BY
SUPERVISED
CHIEF MECH. ENG. SEC.
SUBMITTED:
CHIEF DESIGN BRANCH
RECOMMENDED:
CHIEF

MCNARY LOCK AND DAM

COLUMBIA RIVER, OREGON AND WASHINGTON

PERMANENT JUVENILE FISH FACILITIES

PRIMARY DEWATERING
TRANSITION AREA FLOOR SCREEN CLEANER
TRUCK DETAILS

APPROVED: DATE 92 JUN 17

SCALE AS SHOWN | INV. NO. 92-B-32

SHEET NO. 86 | FILE NO. MDF-1-3-9/34

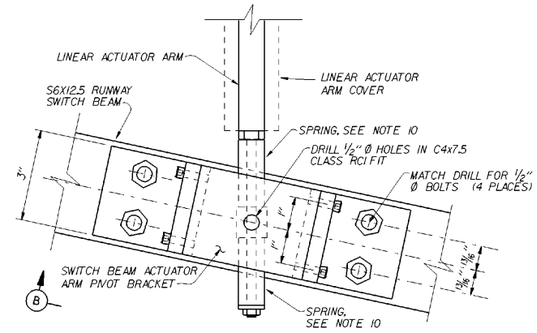

DETAIL A
85

SCALE IN INCHES

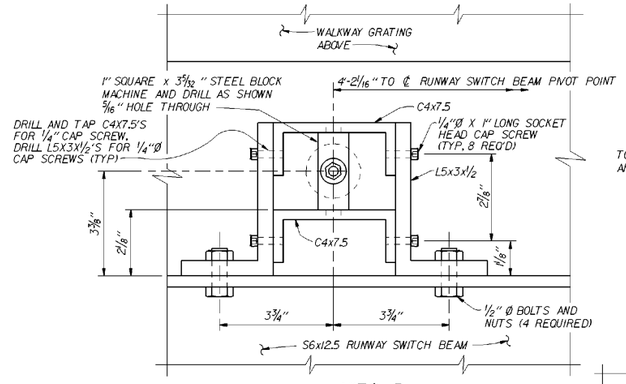

VIEW B

SCALE IN INCHES

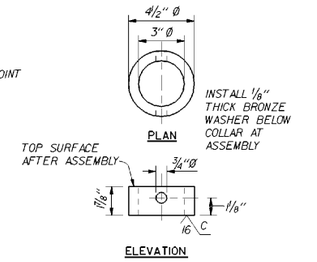

PIVOT POINT COLLAR

SCALE IN INCHES

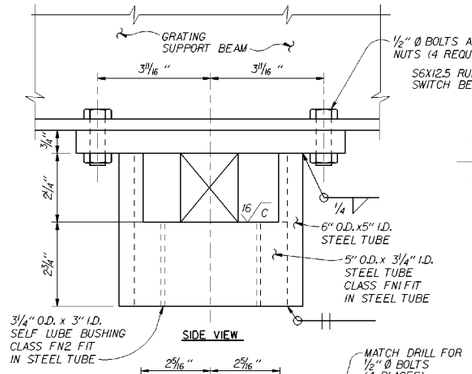

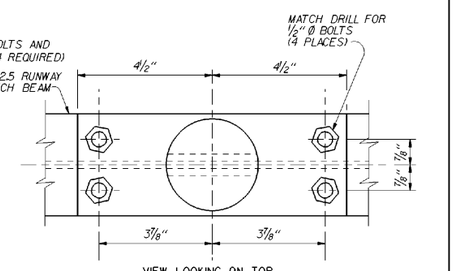

VIEW LOOKING ON TOP

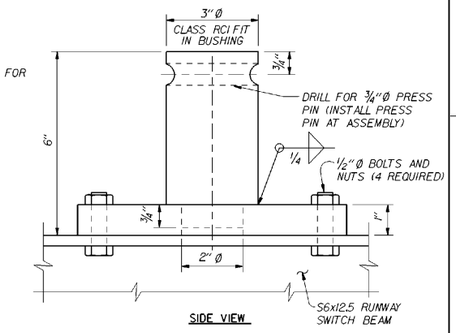

SIDE VIEW

RUNWAY SWITCH BEAM PIVOT POINT LOWER BRACKET

SCALE IN INCHES

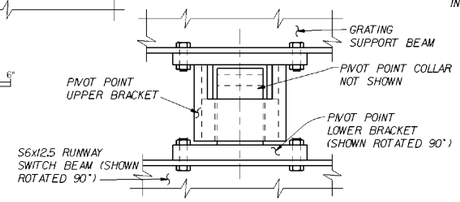

RUNWAY SWITCH BEAM PIVOT POINT

SCALE IN INCHES

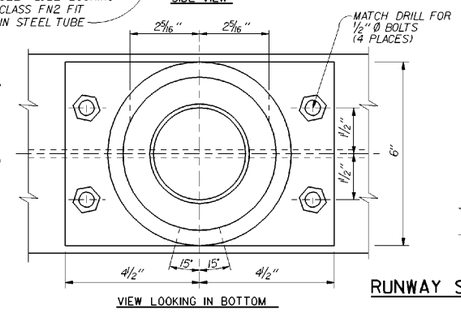

RUNWAY SWITCH BEAM PIVOT POINT UPPER BRACKET

SCALE IN INCHES

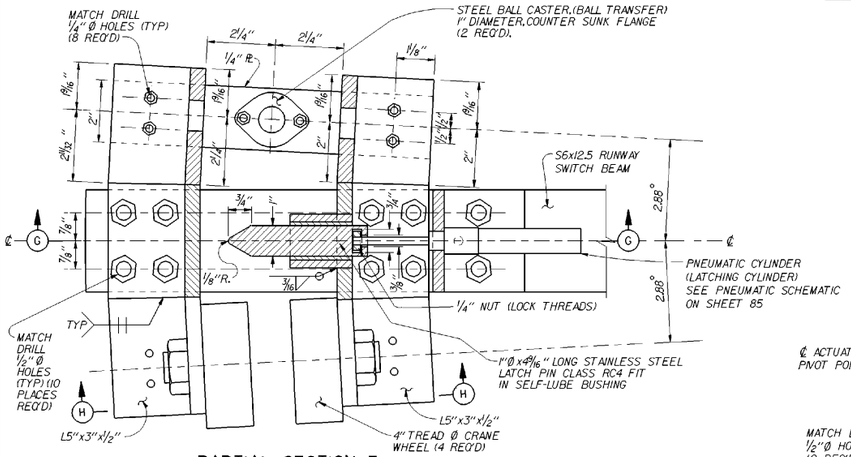

PARTIAL SECTION F

(SYMETRICAL ABOUT CENTER LINE)
(SWITCH BEAM SUPPORT RAIL NOT SHOWN)

SCALE IN INCHES

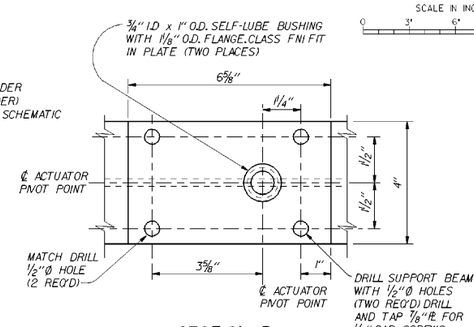

SECTION D

SCALE IN INCHES

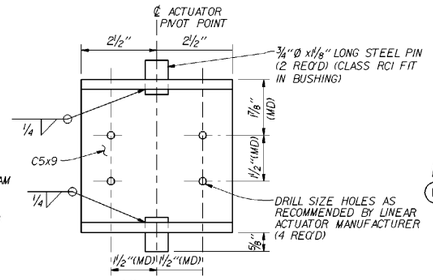

VIEW E

ELECTRIC ACTUATOR NOT SHOWN

SCALE IN INCHES

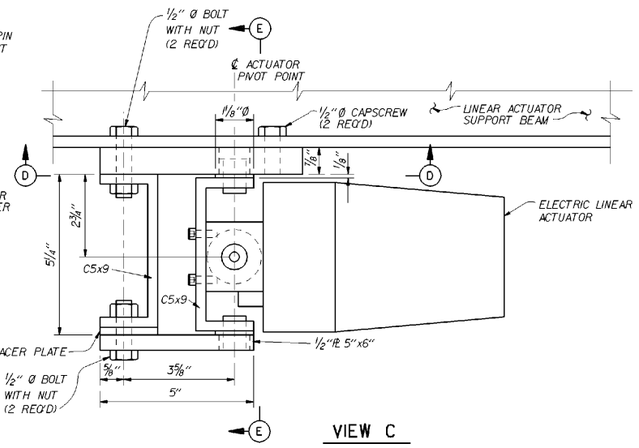

VIEW C
85

SCALE IN INCHES

NOTE: SEE SHEET 85 FOR NUMBERED NOTES.

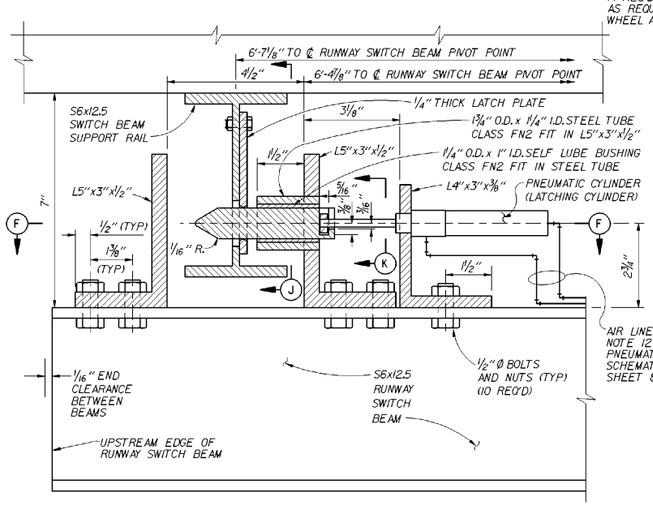

PARTIAL SECTION G

SCALE IN INCHES

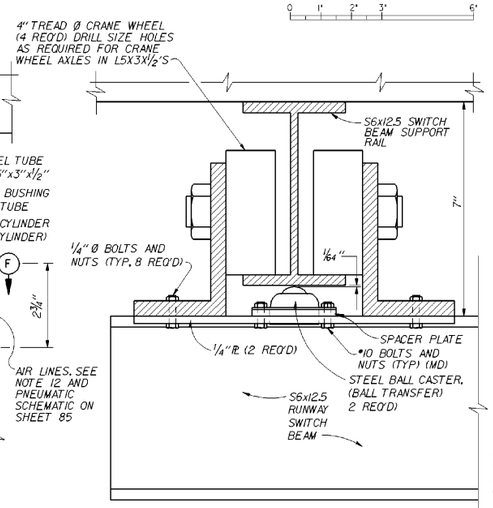

SECTION H

SCALE IN INCHES

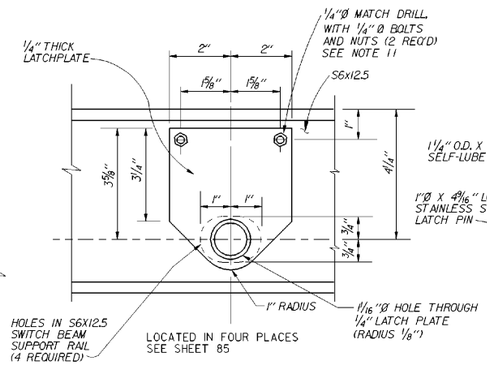

SECTION J

LATCHING MECHANISM NOT SHOWN

SCALE IN INCHES

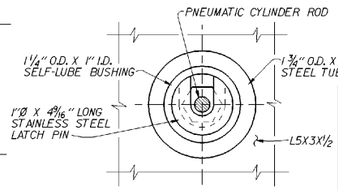

SECTION K

SCALE IN INCHES

REVISION	DATE	DESCRIPTION	CHKD.	APPR.
A	95 SEPT	AS CONSTRUCTED		

U. S. ARMY ENGINEER DISTRICT
WALLA WALLA, WASHINGTON

MCNARY LOCK AND DAM
COLUMBIA RIVER, OREGON AND WASHINGTON
PERMANENT JUVENILE FISH FACILITIES
PRIMARY DEWATERING
TRANSITION AREA FLOOR SCREEN CLEANER
RUNWAY SWITCH BEAM DETAILS

K. RENSHAW — DESIGNED BY
K. RENSHAW — DRAWN BY / SCALE DRAWING
S. ROSS — CHECKED BY
SUPERVISED
CHIEF, MECH. DES. SEC.
SUBMITTED
CHIEF, DESIGN BRANCH
RECOMMENDED:
CHIEF
APPROVED
DATE 92 JUN 17

COMPUTER AIDED DESIGN & DRAFTING
DESIGN FILENAME: /usr2/cad/mjf/mjf08/dgn
PLOTTING TIME: 21-JUN-1996 10:01
PLOTTING METHOD: PRINTER

SCALE AS SHOWN | INV. NO. 92-B-32
SHEET NO. 87 | FILE NO. MDF-1-3-9/35

REFERENCE FILES ATTACHED: YES MJF.BLK | LEVELS ON FOR CONTRACT DRWGS: 1-63 | SCALE: 3/4" : 1' - 0"

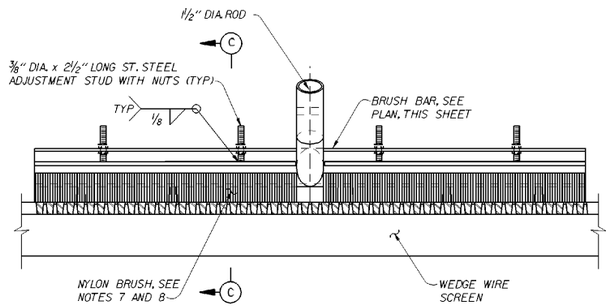

BRUSH FRONT ELEVATION

SCALE IN INCHES

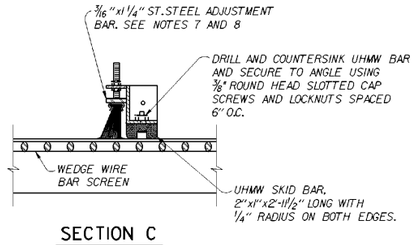

SECTION C

SCALE IN INCHES

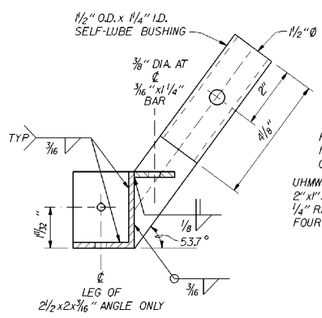

SECTION D

SCALE IN INCHES

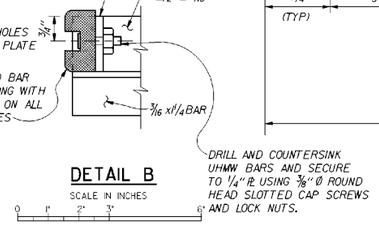

DETAIL B

SCALE IN INCHES

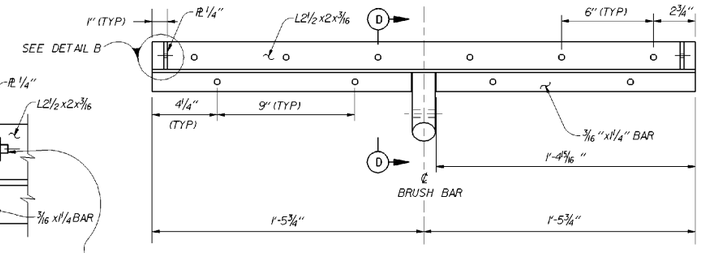

PLAN: BRUSH BAR ASSEMBLY

SCALE IN INCHES

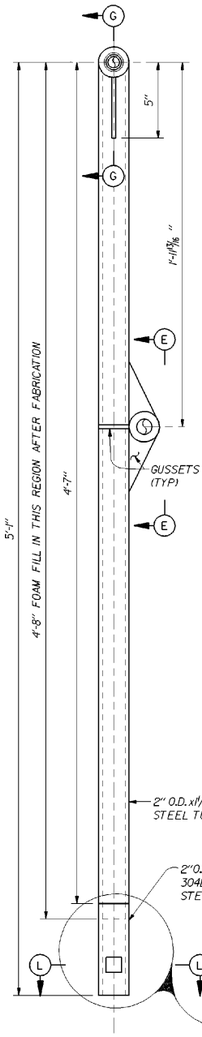

BRUSH ARM SIDE ELEVATION

SCALE IN FEET

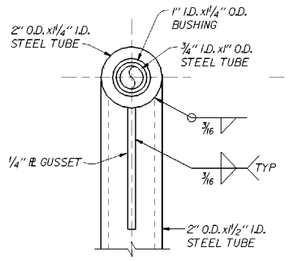

SECTION J

SCALE IN INCHES

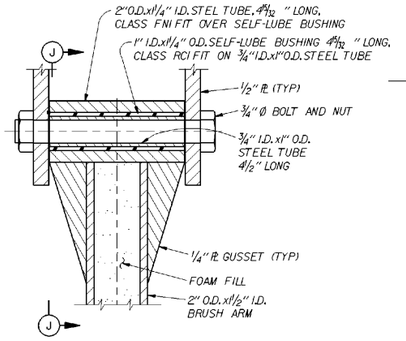

SECTION G

SCALE IN INCHES

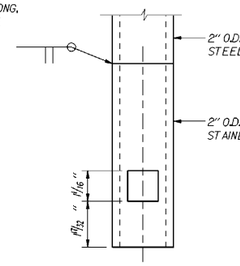

DETAIL H

SCALE IN INCHES

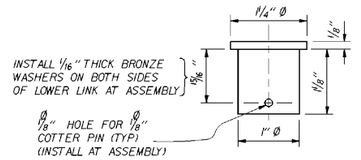

DETAIL A

SCALE IN INCHES

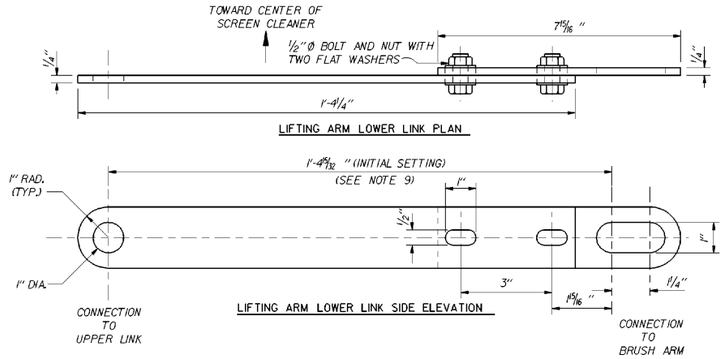

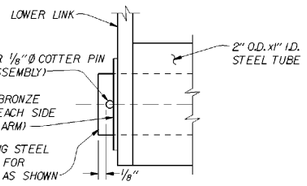

DETAIL K

SCALE IN INCHES

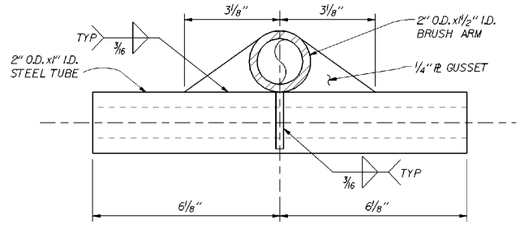

PLAN

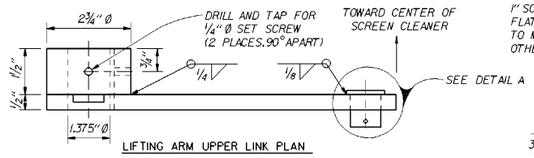

LIFTING ARM UPPER LINK PLAN

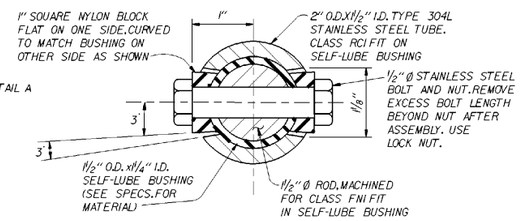

SECTION L

SCALE IN INCHES

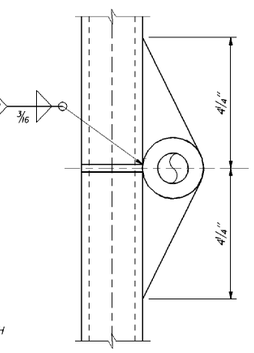

VIEW F

(LOWER LINK NOT SHOWN)

SCALE IN INCHES

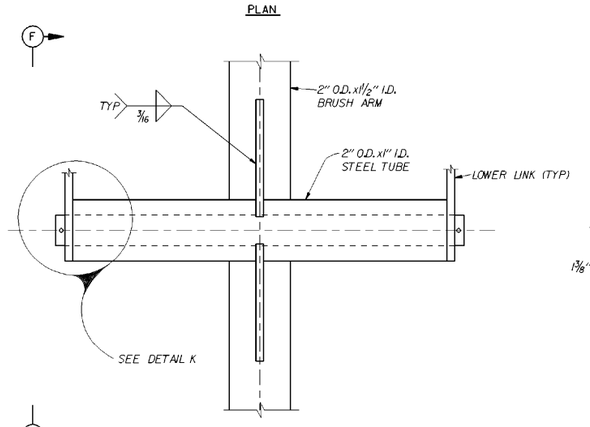

ELEVATION

VIEW E

SCALE IN INCHES

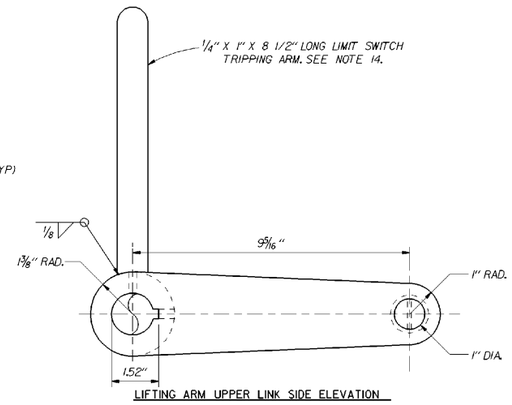

LIFTING ARM UPPER LINK SIDE ELEVATION

LIFTING ARM LINK DETAILS

(TWO OF EACH REQUIRED)

SCALE IN INCHES

NOTE: SEE SHEET 85 FOR NUMBERED NOTES.

REVISION	DATE	DESCRIPTION	CHKD.	APPR.
A	95 SEPT	AS CONSTRUCTED		

U. S. ARMY ENGINEER DISTRICT
WALLA WALLA, WASHINGTON

DESIGNED BY: K. RENSHAW
DRAWN BY (CADD DRAWN): K. RENSHAW
CHECKED BY: S. ROSS
SUPERVISED:
CHIEF, MECH. ENG. SEC.
SUBMITTED:
CHIEF, DESIGN BRANCH
RECOMMENDED:
CHIEF

MCNARY LOCK AND DAM

COLUMBIA RIVER, OREGON AND WASHINGTON

PERMANENT JUVENILE FISH FACILITIES

PRIMARY DEWATERING
TRANSITION AREA FLOOR SCREEN CLEANER
BRUSH BAR DETAILS

APPROVED:
DATE 92 JUN 17

SCALE AS SHOWN | INV. NO. 92-B-32

SHEET NO. 88 | FILE NO. MDF-1-3-9/36

COMPUTER AIDED DESIGN & DRAFTING
DESIGN FILENAME: /usr2/cad/mjf/mjf088.dgn
PLOTTING TIME: 17-JUN-1998 10:10
PLOTTING METHOD: PRINTER