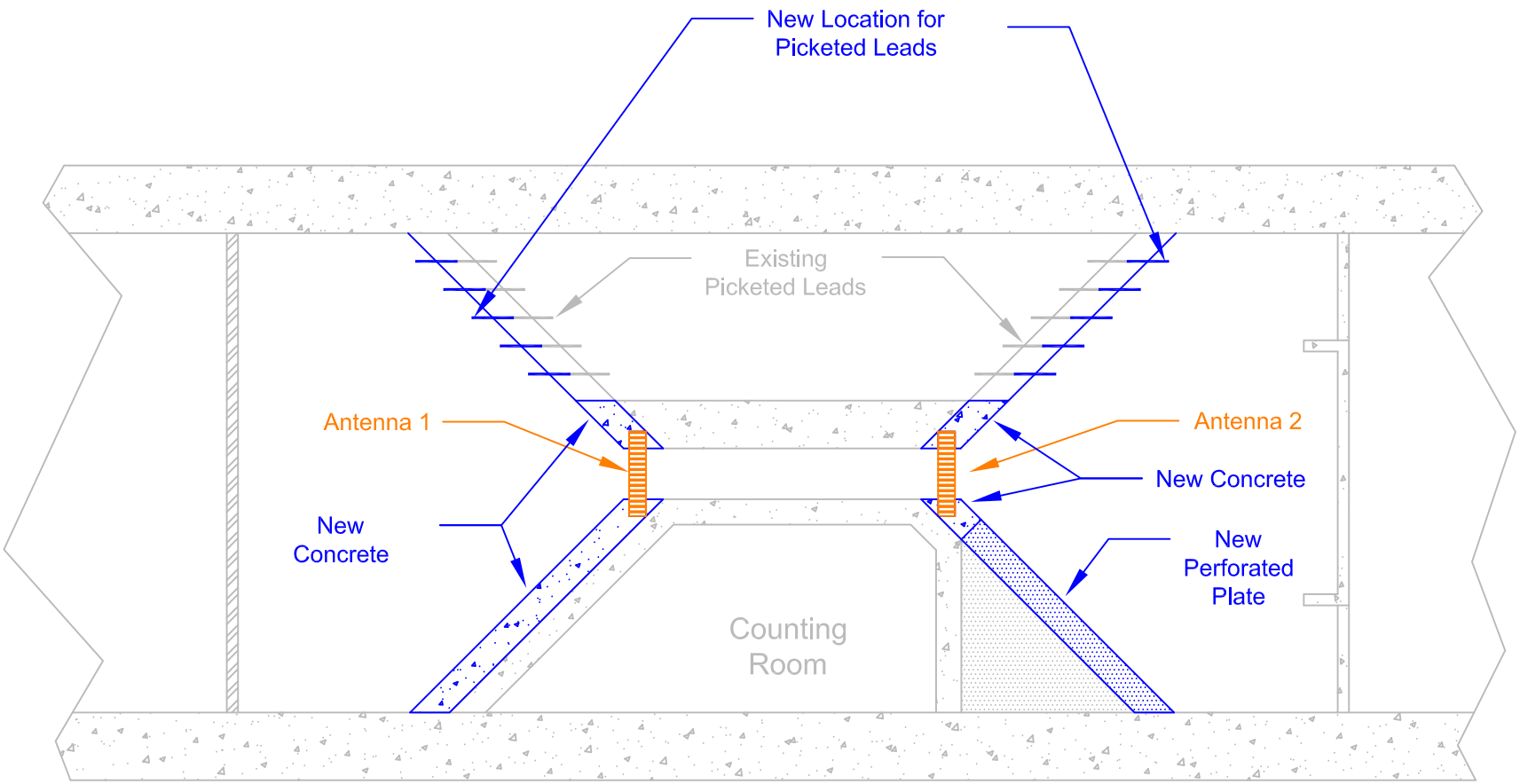


Gray - Existing Structure

Blue - New Structure

Orange - Proposed PIT Tag Antennas

| | | | | | | | |
|---|---|---|---|---|---|---|---|
| Rev 0 | | Pacific States Marine Fisheries Commission | | TDAE Counting Window PIT Tag Antenna Concept Option 1 - Page 1 of 4 | | | |
| | | INITIALS: | ACB | DATE: | 1/31/2012 | DRAWN BY: | Alan Brower | DRAWING REV. | 0 |

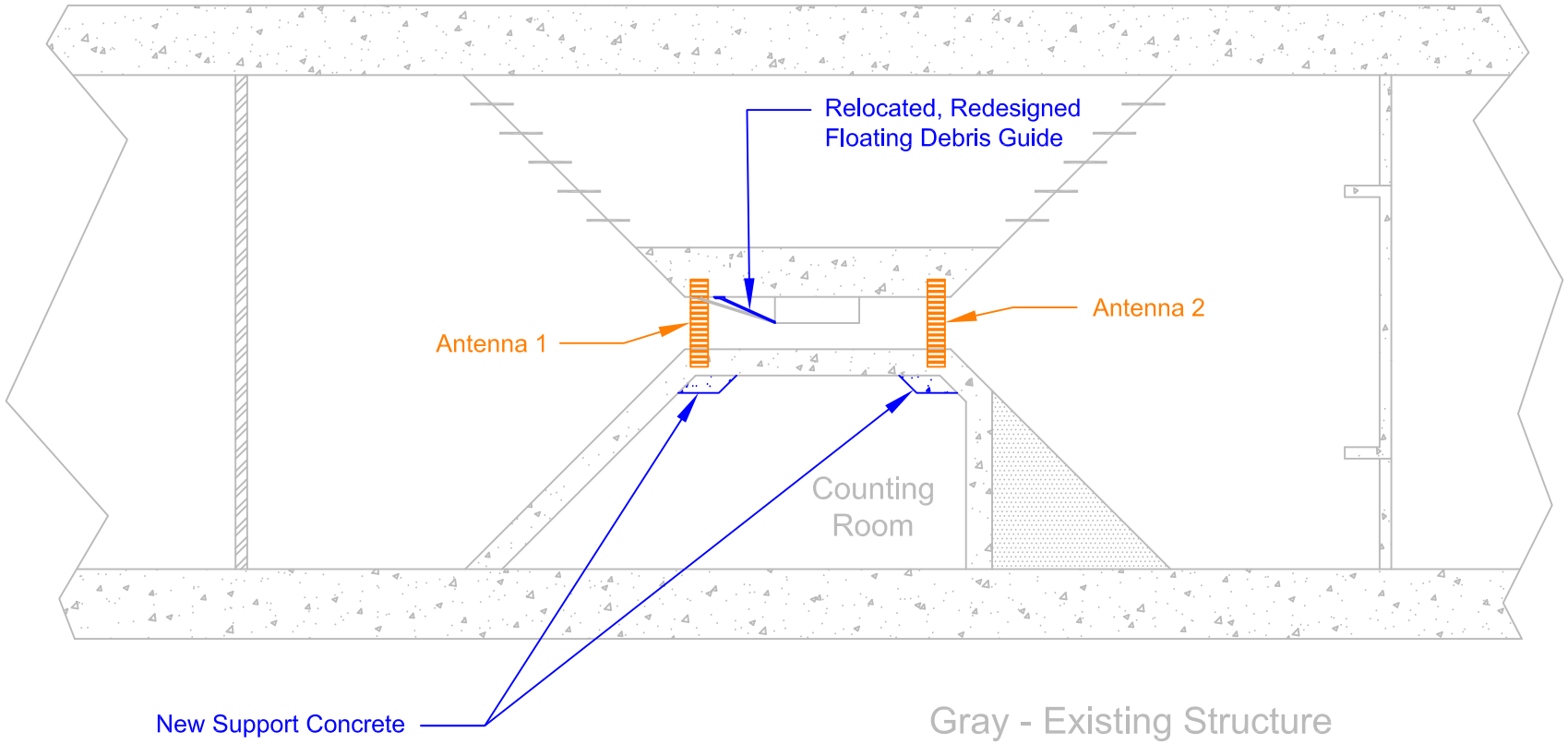


Gray - Existing Structure

Blue - New Structure

Orange - Proposed PIT Tag Antennas

| | | | | | | | |
|---|---|---|---|---|---|---|---|
| Rev 0 | | Pacific States Marine Fisheries Commission | | TDAE Counting Window PIT Tag Antenna Concept Option 2 - Page 2 of 4 | | | |
| | | INITIALS: | ACB | DATE: | 1/31/2012 | DRAWN BY: | Alan Brower | DRAWING REV. | 0 |

Notes:

1) This option could easily be adapted to work at the downstream side of the counting window.

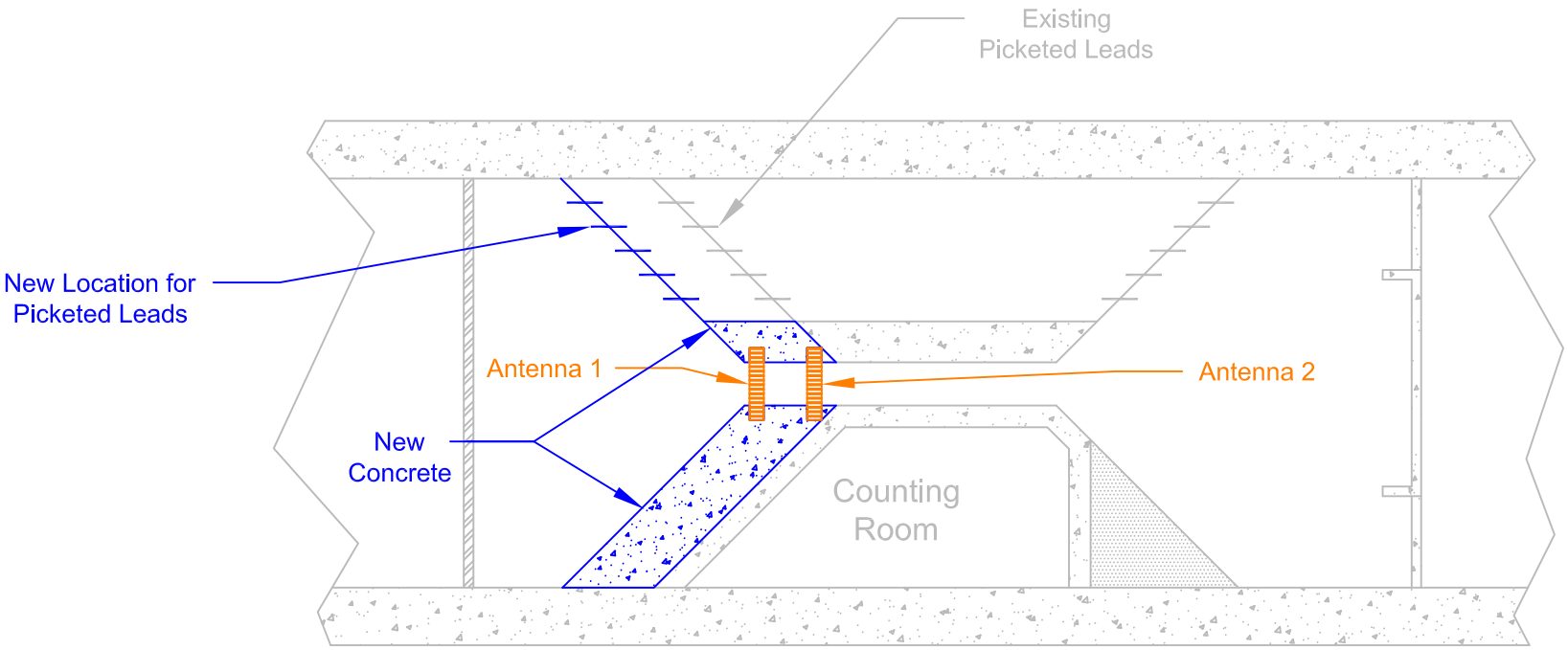


Gray - Existing Structure

Blue - New Structure

Orange - Proposed PIT Tag Antennas

| | | | | | | | |
|---|---|---|---|---|---|---|---|
| Rev 0 | | Pacific States Marine Fisheries Commission | | TDAE Counting Window PIT Tag Antenna Concept Option 3 - Page 3 of 4 | | | |
| | | INITIALS: | ACB | DATE: | 1/31/2012 | DRAWN BY: | Alan Brower | DRAWING REV. | 0 |

Notes:

1) Opening is centered in antenna.

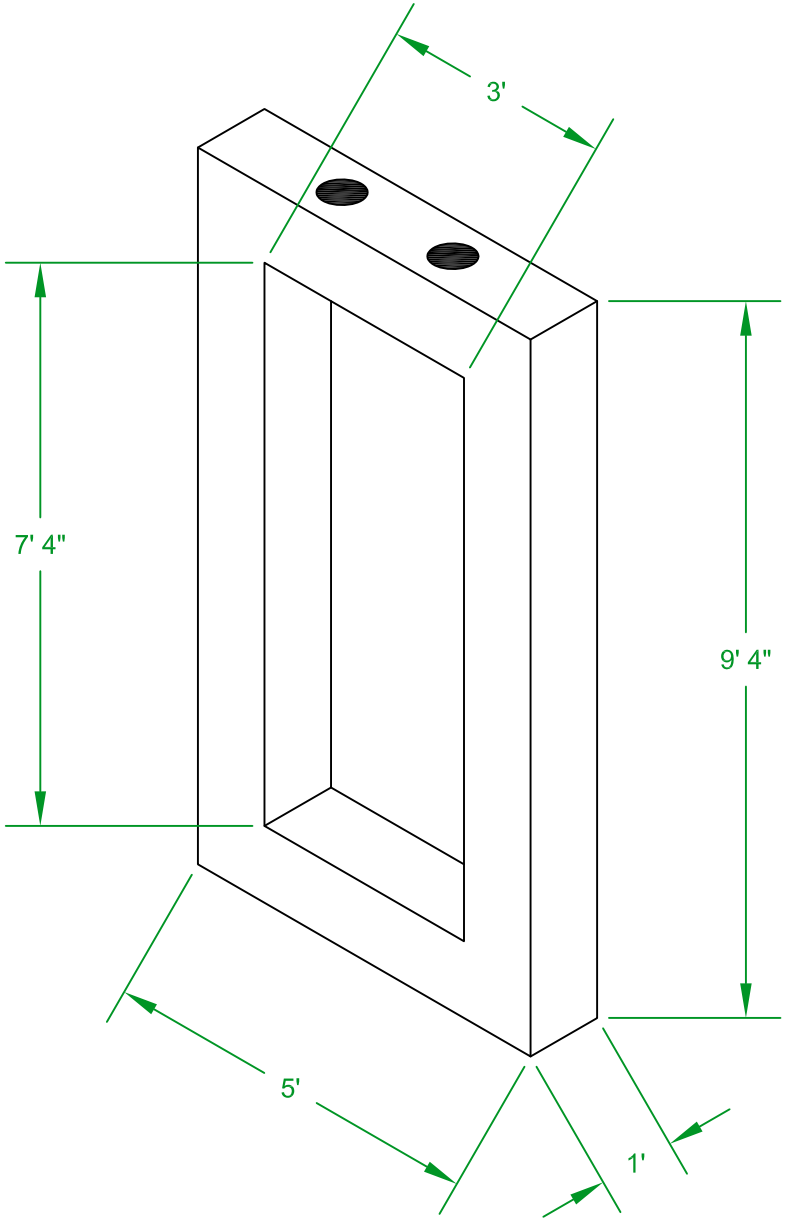


| | | | | | | | |
|---|---|---|---|---|---|---|---|
| Rev 0 | | Pacific States Marine Fisheries Commission | | TDAE Counting Window PIT Tag Antenna Concept<br>PIT Tag Antenna - Page 4 of 4 | | | |
| | | INITIALS: ACB | DATE: 1/31/2012 | DRAWN BY: | Alan Brower | DRAWING REV. | 0 |

# TDAE PIT Tag Antenna Counting Window Option Considerations

## Common to All Options

| | |
|---|---|
| 1 | These designs, if acceptable, could be adapted for all four ladders at The Dalles and John Day. If this comes to pass, PSMFC recommends standardization to reduce design costs and spare equipment costs. |
| 2 | New concrete to be reinforced with fiberglass rebar in one direction (horiz/vert) and stainless steel in the other (within 8" of the PIT tag antennas). |
| 3 | Non-ferrous ties shall be used to hold the rebar in place prior to pouring concrete. |
| 4 | The antennas will need to be sunk 12" into the raised floor of the counting window channel. |

## Option 1

| | PROs | | CONs |
|---|---|---|---|
| 1 | Minimal counting window channel extension. | 1 | Extends counting window channel extension by 56" (28" either end). Note: This was extended at the McNary Washington shore with no reported adverse fish passage effects. |
| 2 | No extensive remodeling to counting window room. | 2 | Downstream level sensor to be relocated. |
| 3 | Relatively low cost of construction compared to weir walls. | 3 | Both picketed leads to be relocated. |
| 4 | Preferred PIT tag antenna spacing. | | |
| 5 | Minimal disruption to hydraulics. | | |
| 6 | Short construction time window. | | |
| 7 | Proven concept at McNary Washington shore since April 2006. | | |
| 8 | No R&D work required for PIT tag antenna development. | | |
| 9 | PIT tag antennas easily removed for maintenance or replacement. | | |
| 10 | No cutting into floors or sidewalls, eliminating structural concerns. | | |
| 11 | Provides ancillary opportunity for picketed lead upgrade regarding use, lamprey passage, automation, etc. McNary upgraded their picked leads during the PIT tag antenna installation. | | |
| 12 | Due to the simplicity of this design, contracting and construction could possibly proceed in 2013. | | |
| 13 | PIT tag system cost is greatly reduced with 2 transceivers and antennas ($43,000) vs. 4 transceivers and antennas ($86,000 at slotted weir wall) or 8 transceivers and antennas ($172,000 at overflow weir wall). | | |
| 14 | This design keeps the PIT tag antenna's electrical connectors above water, eliminating maintenance issues. | | |

| Option 2 | | | |
|---|---|---|---|
| **PROs** | | **CONs** | |
| **1** | Counting window channel extension unchanged. | **1** | Design complexity will increase due to the need to reroute six conduits immediately over PIT tag antenna 1. |
| **2** | Acceptable PIT tag antenna spacing. | **2** | New support concrete for antennas to take space in the counting room. |
| **3** | No hydraulic changes. | **3** | Design complexity will increase in order to maintain mobility of the moving light box. |
| **4** | PIT tag system cost is greatly reduced with 2 transceivers and antennas ($43,000) vs. 4 transceivers and antennas ($86,000 at slotted weir wall) or 8 transceivers and antennas ($172,000 at overflow weir wall). | **4** | Floating debris guide upstream of the counting window (in the counting window channel) would need to be redesigned out of non-ferrous material. |
| **5** | This design keeps the PIT tag antenna's electrical connectors above water, eliminating maintenance issues. | **5** | Floating debris guide upstream of the counting window (in the counting window channel) would need to be shortened, sharpening their angle while in use. |
| | | **6** | The structure of the counting window room will be altered. Engineering and design work will be required to ensure that no water leaks are introduced into the counting window room. |
| | | **7** | An extensive R&D effort would be required to reduce the size of the PIT tag antenna and/or shield for surrounding metallic structures. |
| | | **8** | Due to the complexity of this design and the need for PIT tag antenna R&D, this option could possibly be delayed until 2014/2015. |
| | | **9** | The sunshade over the counting window channel would present difficulties in PIT tag antenna removal for maintenance. |
| | | **10** | All metallic objects near the PIT tag antennas would need to be investigated for electrical interference. |
| | | **11** | All metallic equipment may need to be replaced with non-metallic or non-ferrous equipment. |
| | | **12** | Backboard and lighting technology in the counting window channel may need to be changed (example: fluorescent lights have been found to create RF noise interference). |

| Option 3 | | | |
|---|---|---|---|
| PROs | | CONs | |
| 1 | Only one picketed lead gets relocated | 1 | Extends counting window channel extension by 76" |
| 2 | No extensive remodeling to counting window room. | 2 | PIT tag antennas are at the minimum acceptable spacing. |
| 3 | PIT tag system cost is greatly reduced with 2 transceivers and antennas ($43,000) vs. 4 transceivers and antennas ($86,000 at slotted weir wall) or 8 transceivers and antennas ($172,000 at overflow weir wall). | 3 | Greater changes to hydraulics than options 1 & 2 |
| 4 | Relatively low cost of construction compared to weir walls. | | |
| 5 | Short construction time window. | | |
| 6 | Proven concept at McNary Washington shore since April 2006. | | |
| 7 | No R&D work required for PIT tag antenna development. | | |
| 8 | PIT tag antennas easily removed for maintenance or replacement. | | |
| 9 | No cutting into floors or sidewalls, eliminating structural concerns. | | |
| 10 | Due to the simplicity of this design, contracting and construction could possibly proceed in 2013. | | |
| 11 | This design keeps the PIT tag antenna's electrical connectors above water, eliminating maintenance issues. | | |

## TDAN Slotted Weir Wall Considerations

| | PROs | | CONs |
|---|---|---|---|
| 1 | Proven technology at Ice Harbor and Lower Granite Dams (12" weir walls). | 1 | Weir walls would have to be thickened to accommodate the PIT tag antennas. |
| 2 | Would interrogate all PIT taged fish regardless of whether the counting window picketed leads are in use. | 2 | Would require four transceivers to cover two weir walls for 100% redundant coverage (one orifice and one slot per weir wall). Option 1, 2 and 3 equipment cost: $43,000. Slotted weir wall equipment cost: $86,000. |
| 3 | Could possibly be accomplished in 2013. | 3 | Orifice antenna would require excavation of the ladder floor unless the orifice was allowed to be raised, which would require a ramp for lamprey passage. |
| | | 4 | Hydraulics would change due to thicker weir wall. |
| | | 5 | A catwalk over each weir wall would be needed for maintenance. |
| | | 6 | Weir wall may need a concrete cap for strength. |
| | | 7 | Orifice PIT tag antenna connectors would be underwater, a known point of failure. |

## TDAE and TDAN Overflow/Orifice Considerations - Including Removable Weir Wall 154

| | PROs | | CONs |
|---|---|---|---|
| 1 | Would interrogate all PIT taged fish regardless of whether the counting window picketed leads are in use (assuming the overflow antennas work). | 1 | We have no proven design for an overflow antenna. An R&D effort would have to be made to ensure success. This may push out the installation date to 2014 or 2015. |
| | | 2 | Would require eight transceivers to cover two weir walls for 100% redundant coverage (two orifice and two overflow per weir wall). Option 1, 2 and 3 equipment cost: $43,000. Overflow weir wall equipment cost: $172,000. |
| | | 3 | Overflow antenna would require excavation of the exterior side weir walls and removing all ferrous material to mitigate RF loading on the existing rebar. The exterior weir walls would have to be replaced on both sides (unless the PIT tag antennas can be moved toward the center of the ladder). This creates structural concerns for the ladder. |
| | | 4 | Orifice antenna would require excavation of the ladder floor unless the orifice was allowed to be raised, which would require a ramp for lamprey passage. |
| | | 5 | Weir wall would need to be thickened from the current 8" to 14" to accommodate the PIT tag antennas. |
| | | 6 | Hydraulics would change due to thicker weir wall. |
| | | 7 | Orifice PIT tag antenna connectors would be underwater, a known point of failure. |
| | | 8 | The pass through overflow antennas could be a debris trap requiring periodic maintenance. |