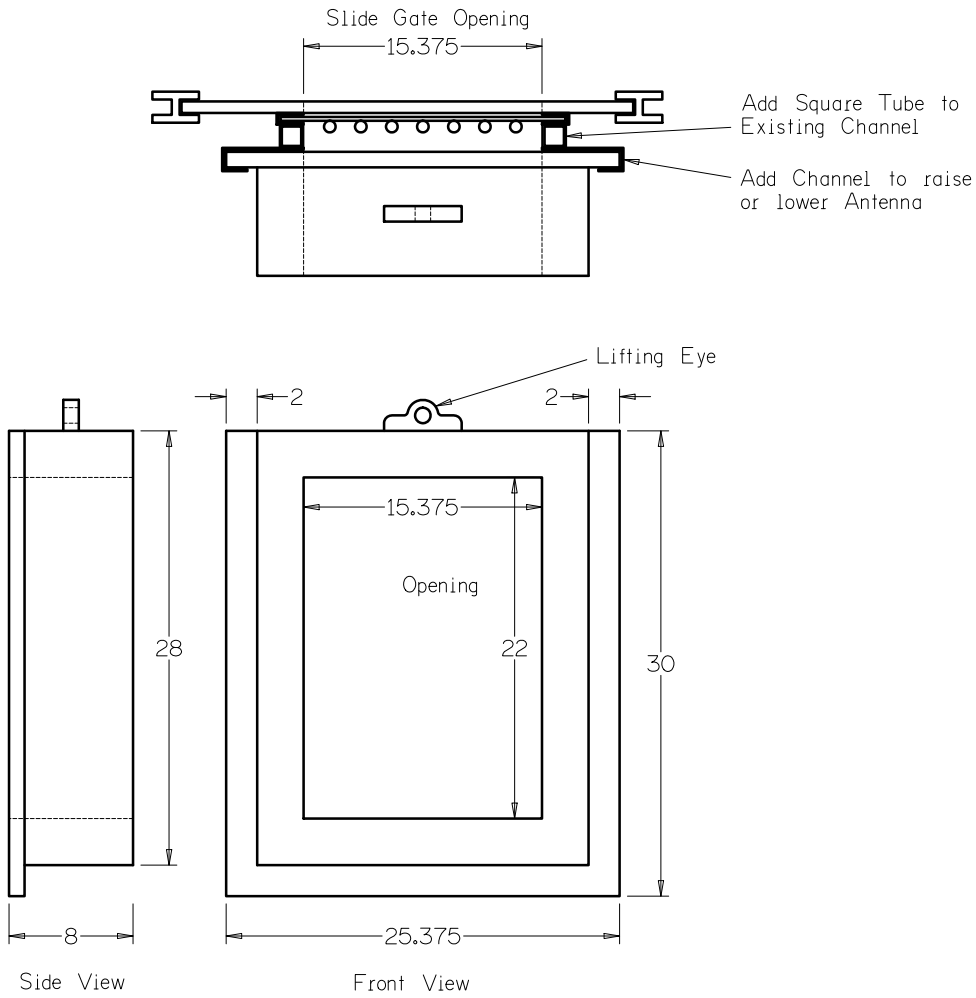
Slide Gate Opening
15.375
Add Square Tube to Existing Channel
Add Channel to raise or lower Antenna
Lifting Eye
2
2
15.375
Opening
22
28
30
8
25.375
Side View
Front View