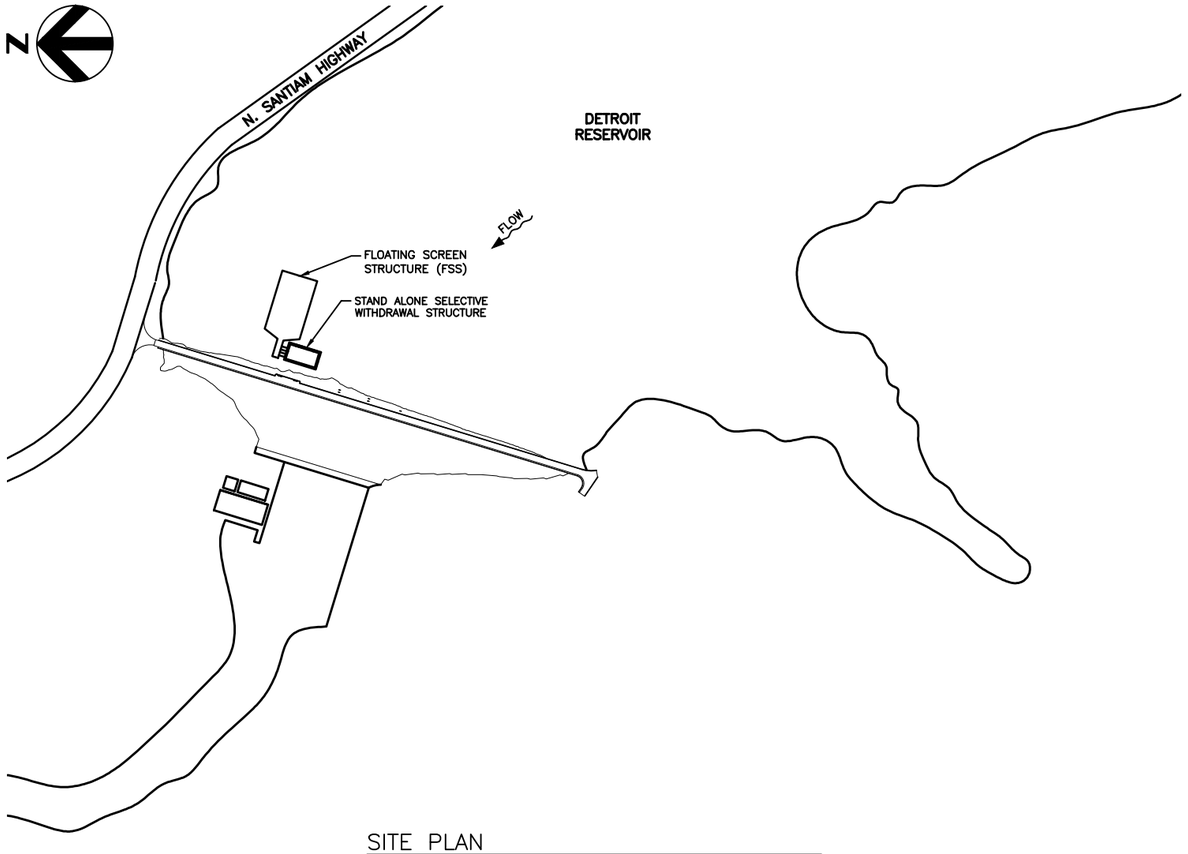

SITE PLAN
SCALE: 1" = 500'–0"

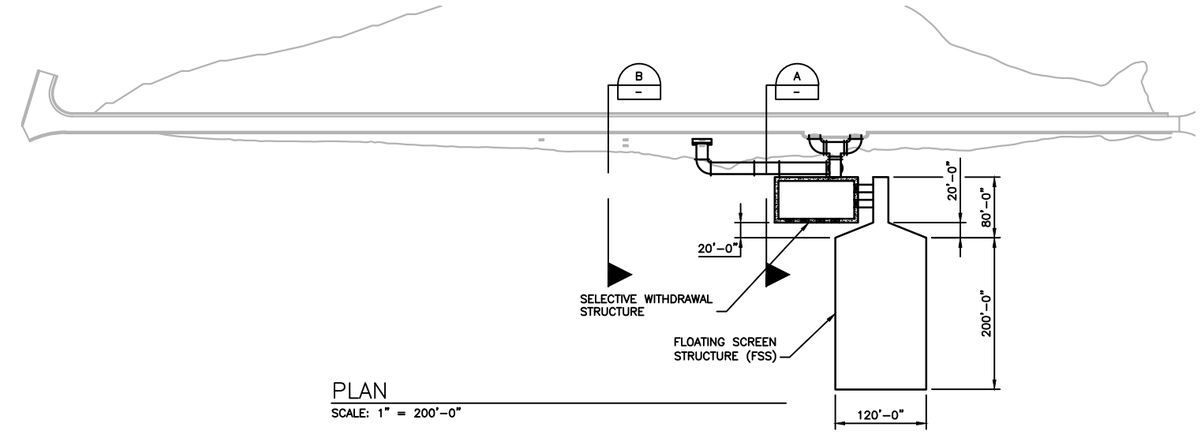

PLAN
SCALE: 1" = 200'–0"

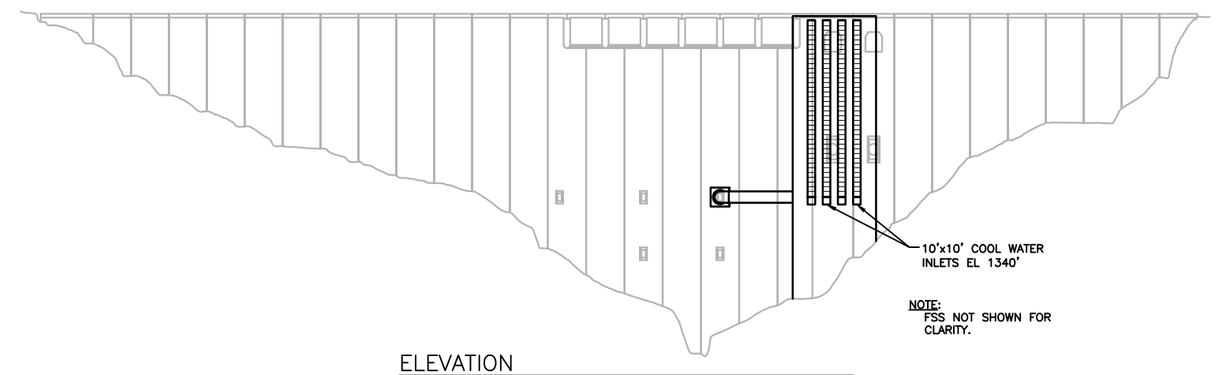

NOTE:
FSS NOT SHOWN FOR CLARITY.

ELEVATION
SCALE: 1" = 200'–0"

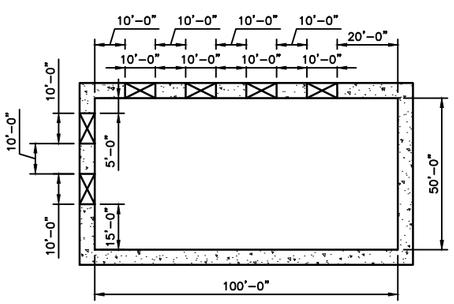

NOTES:

1. ROCK OR STIFF SOIL IS ASSUMED AT THE BASE OF THE STRUCTURE.
2. SILT LAYER ABOVE THE FOUNDATION SOIL WILL BE DREDGED AND REMOVED.

DETAIL 1
SCALE: 1" = 50'–0"

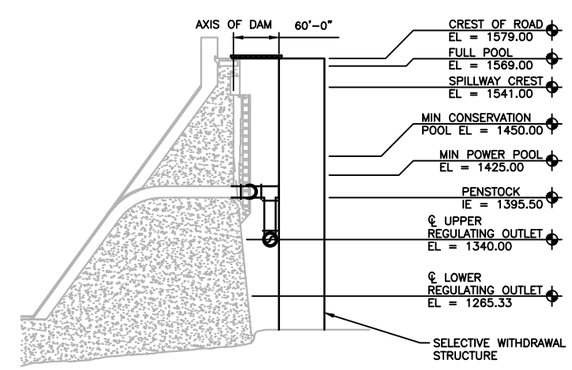

SECTION A
SCALE: 1" = 200'–0"

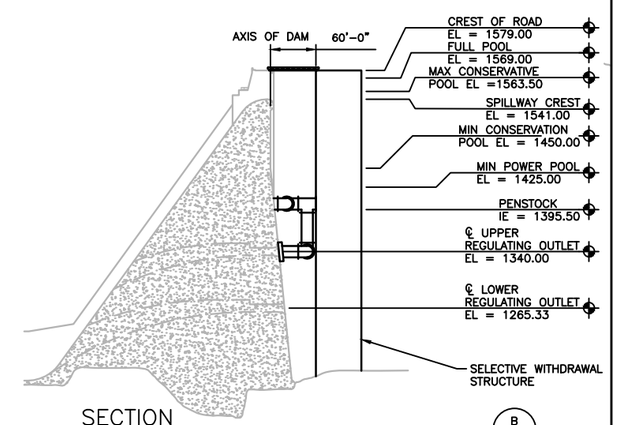

SECTION B
SCALE: 1" = 200'–0"

HDR

PROJECT TITLE
USACE DETROIT DAM
SELECTIVE WITHDRAW STRUCTURE

SHEET TITLE
STAND-ALONE SWS OPTION 3

PROJECT NUMBER
236600

PROJECT MANAGER
Shane Cline

DATE
October 2014

REFERENCE SHEET
–

REFERENCE DOCUMENT
Gen. Assessment of Concepts

EXHIBIT NUMBER
SWS–1

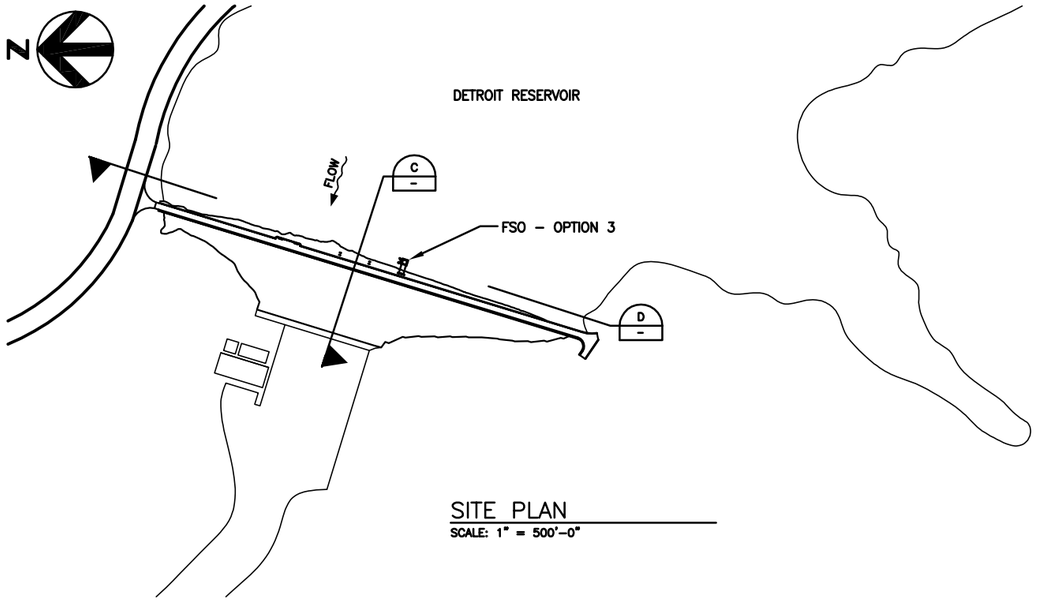

SITE PLAN
SCALE: 1" = 500'–0"

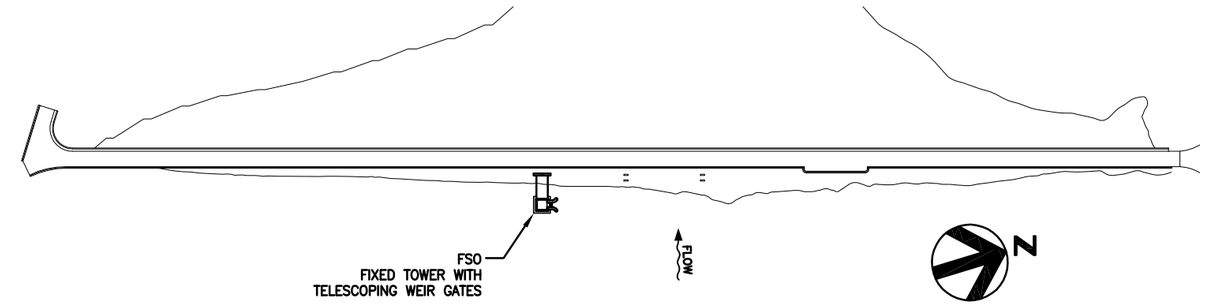

PLAN
SCALE: 1" = 200'–0"

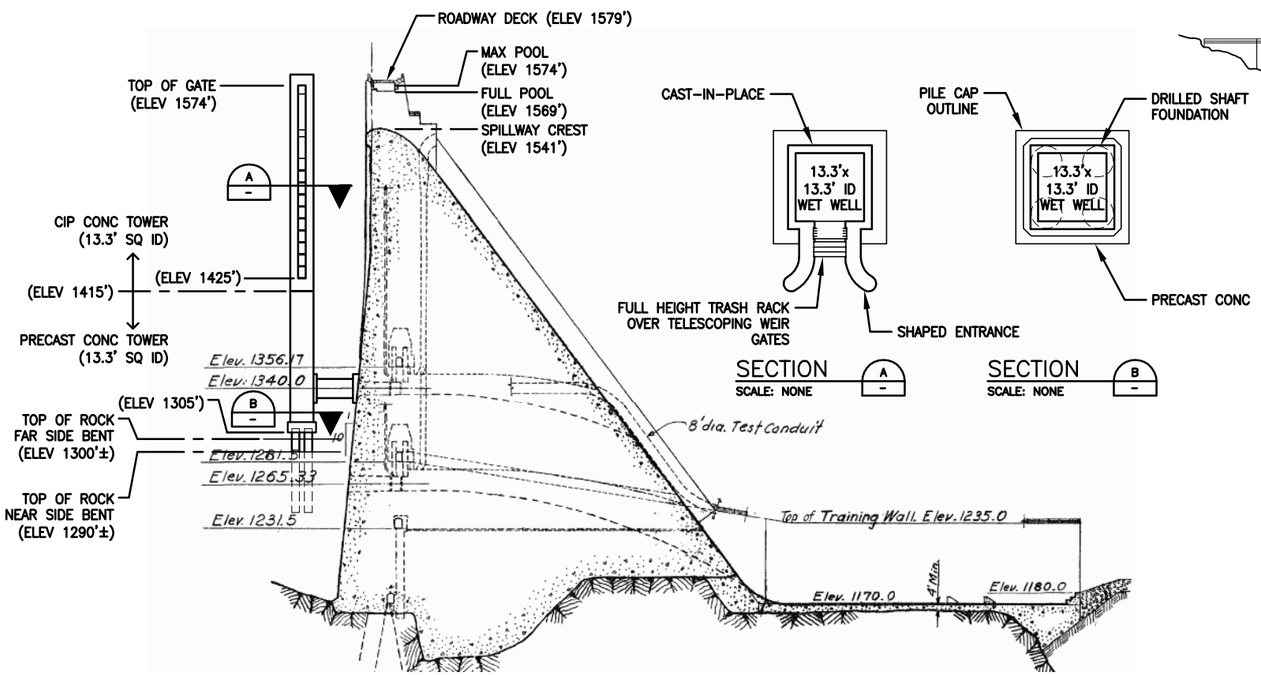

SECTION A
SCALE: NONE

SECTION B
SCALE: NONE

SECTION C
SCALE: NONE

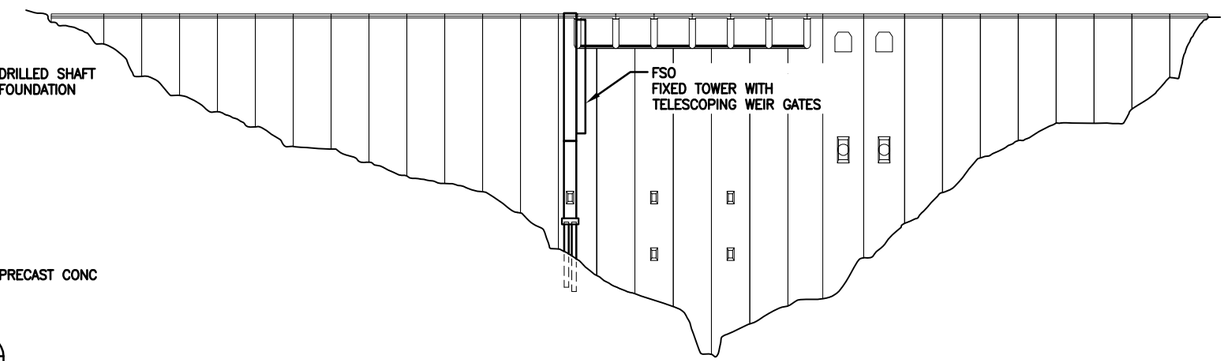

SECTION D
SCALE: 1" = 200'–0"

ART ANDERSON
ASSOCIATES
202 PACIFIC AVE, BREMERTON, WA 98337
(360) 479–5600

HDR

PROJECT TITLE
USACE DETROIT DAM
SELECTIVE WITHDRAW STRUCTURE

SHEET TITLE
FLOATING SURFACE OUTLET - OPTION 3
FIXED TOWER WITH TELESCOPING WEIR GATES CONCEPT

PROJECT NUMBER
236600

PROJECT MANAGER
Shane Cline

DATE
October 2014

REFERENCE SHEET
–

REFERENCE DOCUMENT
General Assessment of Concepts

EXHIBIT NUMBER
FSO–1

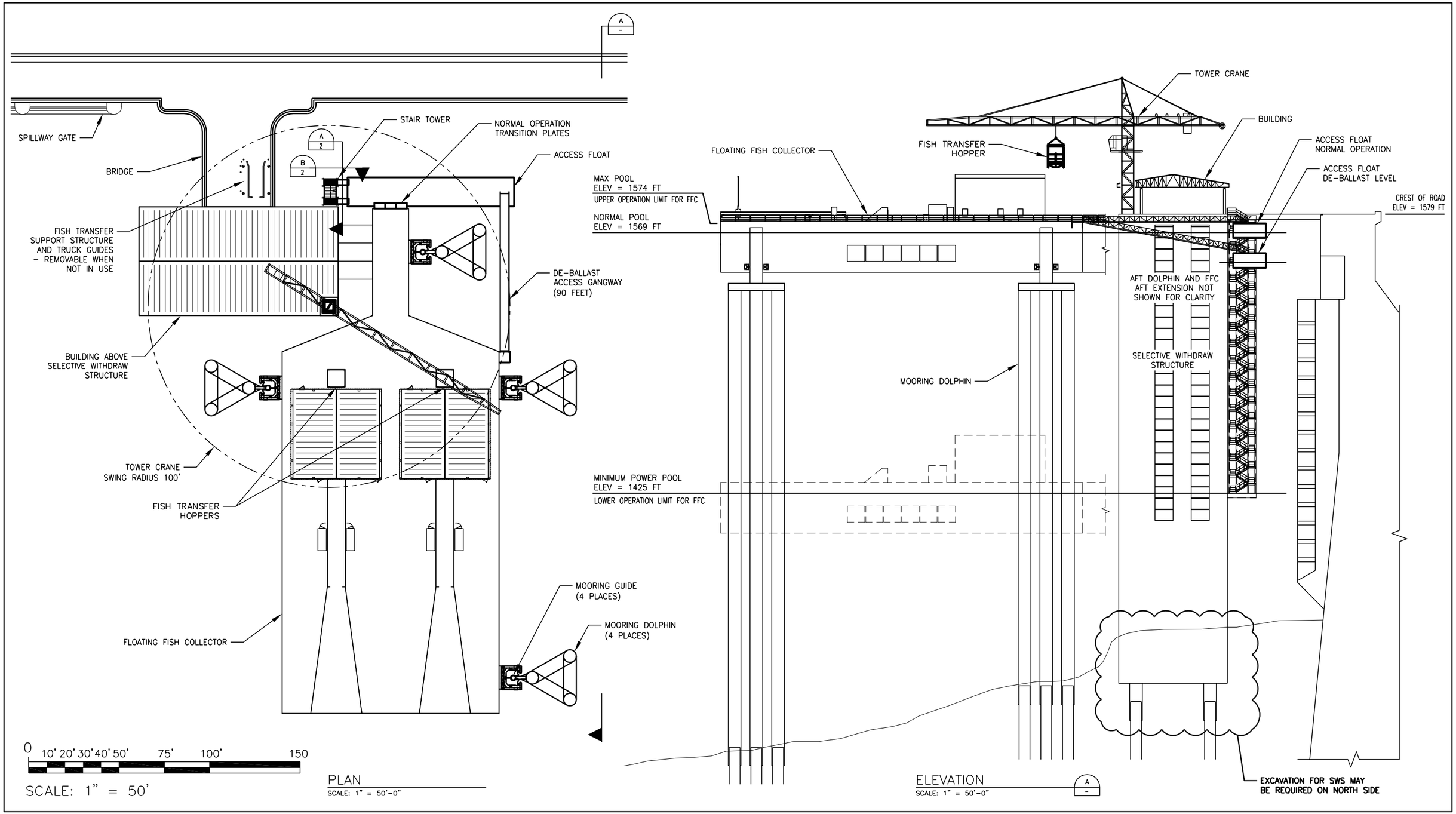

ART ANDERSON ASSOCIATES
202 PACIFIC AVE, BREMERTON, WA 98337
(360) 479-5600

HDR

PROJECT TITLE
USACE DETROIT DAM
SELECTIVE WITHDRAW STRUCTURE

SHEET TITLE
FLOATING FISH COLLECTOR
PERSONNEL AND OPERATIONAL ACCESS LAYOUT

CONCEPT FOR DISCUSSION

PROJECT NUMBER
236600

PROJECT MANAGER
Shane Cline

DATE
9/16/2014

REFERENCE SHEET
–

REFERENCE DOCUMENT
General Assessment of Concepts

EXHIBIT NUMBER
–

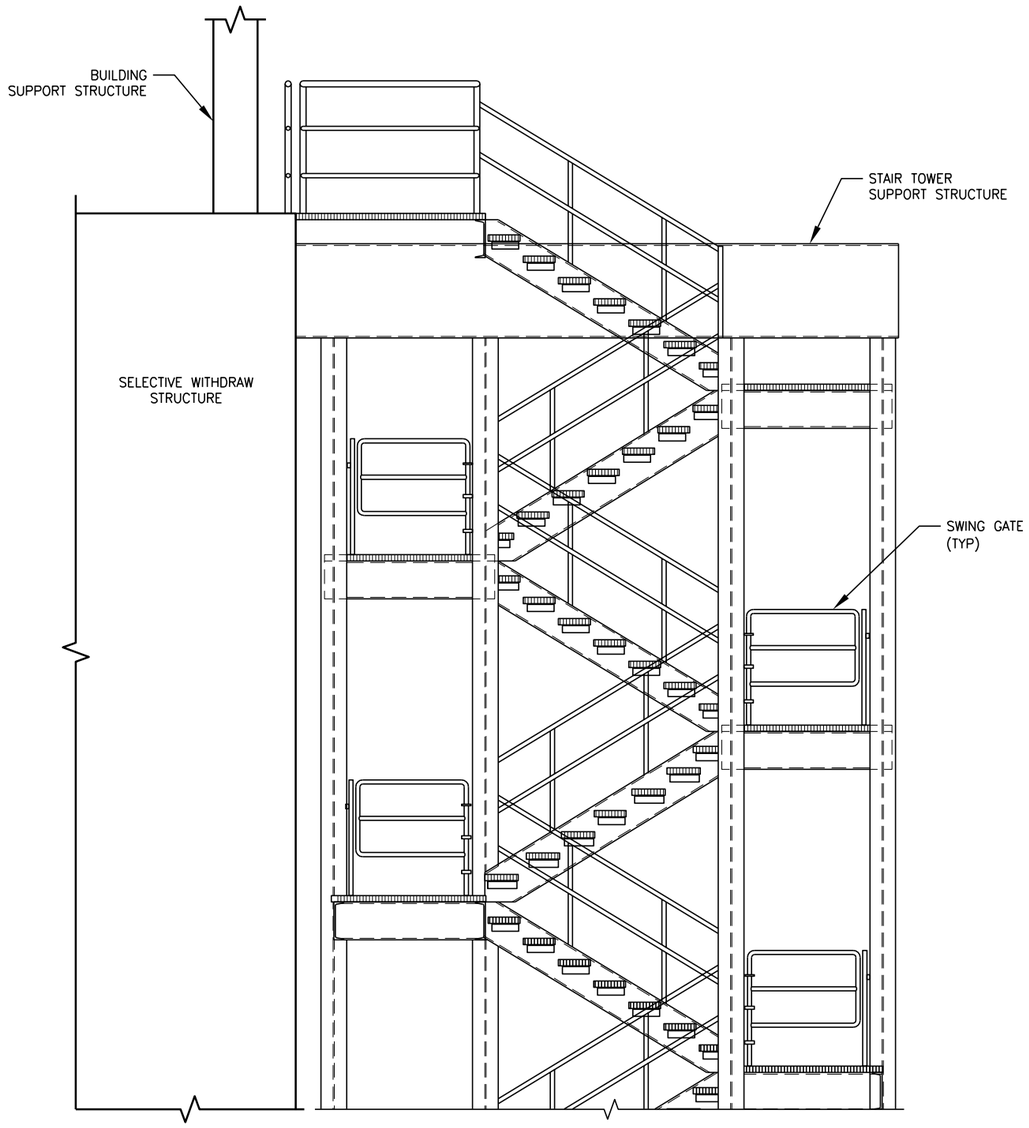

STAIR TOWER ELEVATION (A)
SCALE: 1/4" = 1'-0"

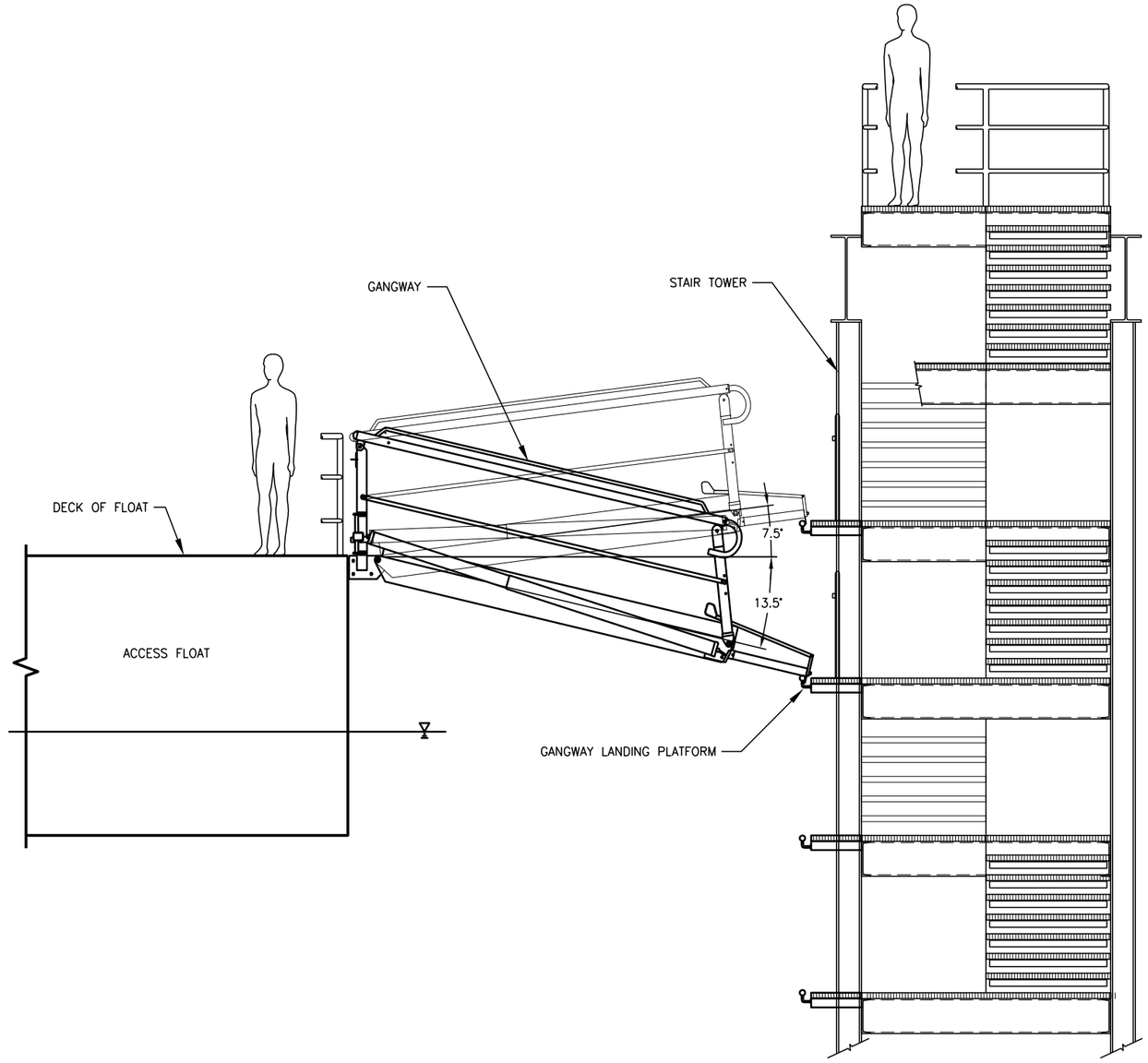

STAIR TOWER SECTION (B)
SCALE: 1/4" = 1'-0"

0 1' 2' 3' 4' 6' 8' 12'

SCALE: 1/4" = 1'-0"

ART ANDERSON ASSOCIATES
202 PACIFIC AVE, BREMERTON, WA 98337
(360) 479-5600

HDR

PROJECT TITLE USACE DETROIT DAM
SELECTIVE WITHDRAW STRUCTURE

SHEET TITLE
FLOATING FISH COLLECTOR
PERSONNEL AND OPERATIONAL ACCESS LAYOUT

CONCEPT FOR DISCUSSION

PROJECT NUMBER 236600
PROJECT MANAGER Shane Cline
DATE 9/16/2014

REFERENCE SHEET –
REFERENCE DOCUMENT General Assessment of Concepts
EXHIBIT NUMBER –